ARBOR | CREEK®

CABINETRY

2022-2023 SPECIFICATIONS MANUAL / FRAMED CABINETRY

2-YEAR LIMITED WARRANTY

ARBOR | CREEK®
CABINETRY

We know that a great deal of time, thought and investment goes into the selection of your cabinetry, and we truly appreciate your decision to purchase Arbor Creek products.

In the unlikely event you encounter a problem with your cabinetry, we are ready and eager to assist you, subject to the terms of this Limited Warranty.

Arbor Creek provides this Limited Warranty to the original customer that either directly purchases our products, or that purchases our products through their third-party builder, dealer, or contractor ("Customer" or "you").

STATEMENT OF LIMITED WARRANTY

We firmly stand behind the quality of our products, and warrant to you, our Customer, that our cabinetry will be free from defects in material and workmanship under ordinary use for a period of 2 years from the date of purchase.

This Limited Warranty is extended to the original Customer only for use of the product within the United States. This Limited Warranty is not transferrable. No changes or modifications can be made to this Limited Warranty except by a company officer.

LIMITATIONS AND EXCLUSIONS

This Limited Warranty is limited to defects in material and workmanship and does not apply to:

- Damage caused by the improper installation of your cabinets.
- Damage, theft, or loss that occurs after we have properly delivered your cabinets to you, or your dealer, builder or contractor.
- Issues with other products used or installed in connection with your cabinets including, but not limited to, appliances, countertops, or plumbing fixtures (including the costs to remove and reinstall such other products).
- Damage caused by misuse, abuse, neglect, accident, alteration, improper or non-residential use, exposure to moisture or extreme temperatures, or other environmental factors in your home, including smoke damage, failure to maintain or acts of God.
- Damage caused by ordinary wear and tear.

NATURALLY OCCURRING VARIATIONS

Wood products. Our cabinets incorporate a variety of natural elements. Naturally occurring wood characteristics including, but not limited to, variations in color or grain pattern, mineral streaks and knots are not considered defects. Wood of all species is subject to the humidity and temperature of its environment and may expand or contract due to changes in weather, temperature, or climate. Due to these ordinary shifts in the environment, wood cabinetry may develop hairline cracks or separation or seam lines. These ordinary variations are not considered quality defects and are not covered by this Limited Warranty.

Wood finishes. Color and finish may be affected by age, character of cabinets, and exposure to UV light, sunlight, smoke, household cleaners, and other environmental conditions.

Painted finishes. Painted finishes have unique characteristics that differ from standard wood finishes. This includes hairline cracks, including, but not limited to, joints and seams, and some natural characteristics of the wood including, but not limited to, grain patterns, knots, and mineral streaks which will remain visible through painted finishes. As painted cabinet products age, the finish may mellow or discolor slightly. The degree of change to the original finish color is affected by the products' exposure to natural And artificial light and other environmental factors in the home.

Because of these natural characteristics, new and/or replacement cabinets may not match showroom displays, color chip samples, photographs in a catalog or website and/or existing cabinets in your home. Any such variations and changes to our products, whether present during production or which develop over time, are not considered defects and are not covered by this Limited Warranty.

WARRANTY PERFORMANCE

In the event of a defect in material or workmanship within the terms and conditions set forth herein, we will repair or replace the product, at our sole option, without charge. If the affected product is no longer available, Arbor Creek reserves the right to: (i) replace the affected component with a new component of a similar style, or (ii) replace the affected component and any other component within the total product to achieve a uniform appearance with as similar and comparable product style and quality as possible to the original product.

We cannot guarantee that replacements will match the finish and appearance of the original product. Our warranty extends solely to the product. We are not responsible for the cost of: (i) removal of defective product, (ii) installation of repaired or replaced product, or (iii) removal or installation of appliances, plumbing, flooring, or other fixtures. Repaired or replaced product shall be warranted for a period equal to the remaining period of the original Limited Warranty on the product or for ninety days, whichever is longer.

LIMITED WARRANTY DISCLAIMER

THIS LIMITED WARRANTY SETS OUT THE FULL EXTENT OF ARBOR CREEK'S RESPONSIBILITIES, AND THE EXCLUSIVE REMEDY REGARDING THE PRODUCTS. ALL IMPLIED WARRANTIES, INCLUDING WITHOUT LIMITATION, IMPLIED WARRANTIES OF MERCHANTABILITY AND FITNESS FOR A PARTICULAR PURPOSE, ARE LIMITED TO THE DURATION OF THIS LIMITED WARRANTY. IN NO EVENT SHALL ARBOR CREEK BE LIABLE FOR DAMAGES IN EXCESS OF THE PURCHASE PRICE OF THE PRODUCT OR FOR, WITHOUT LIMITATION, COMMERCIAL LOSS OF ANY SORT; LOSS OF USE, TIME, DATA, REPUTATION, OPPORTUNITY, GOODWILL, PROFITS OR SAVINGS; INCONVENIENCE; INCIDENTAL, SPECIAL, CONSEQUENTIAL OR PUNITIVE DAMAGES; OR DAMAGES ARISING FROM THE USE OR INABILITY TO USE THE PRODUCT. SOME STATES AND JURISDICTIONS DO NOT ALLOW LIMITATIONS ON HOW LONG AN IMPLIED WARRANTY LASTS, OR THE DISCLAIMER OR LIMITATION OF INCIDENTAL OR CONSEQUENTIAL DAMAGES, SO THE ABOVE LIMITATIONS AND DISCLAIMERS MAY NOT APPLY TO YOU. IF ANY PORTION OF THIS LIMITED WARRANTY IS HELD TO BE ILLEGAL OR UNENFORCEABLE, SUCH PARTIAL ILLEGALITY OR UNENFORCEABILITY SHALL NOT AFFECT THE ENFORCEABILITY OF THE REMAINDER OF THE LIMITED WARRANTY.

CLAIMS

Registration of your warranty is available to help expedite any claim, and will allow us to communicate to you directly regarding our products.

To initiate a claim, contact your builder, dealer, or contractor.

If you cannot initiate your claim through your place of purchase or if you have difficulty obtaining assistance, you may submit a claim by filling in our online form:

ARBOR CREEK

www.arborcreekcabinets.com/contact-us

All claims must be submitted in writing and must specify all issues you have with your cabinets. Pictures are also very helpful to assist in processing your claim. Once Arbor Creek has had an opportunity to review your claim, we will, at our sole discretion, either replace defective cabinets and accessories or repair any defects in the cabinets and accessories within a commercially reasonable period of time.

Arbor Creek is a product of Cabinetworks Group, located at 4600 Arrowhead Dr, Ann Arbor, MI 48105 and reached at 800-522-0183.

This Limited Warranty is effective for products purchased on or after **June 13, 2022.**

Table of Contents

100 Cabinet Specifications
200 Door Styles and Finishes
300 Wall Cabinets
400 Base Cabinets
500 Tall Cabinets
600 Vanity Cabinets
700 Accessories & Parts
800 Modifications

ARBOR | CREEK®

CABINETRY

100

SPECIFICATIONS

In This Section

100.3 Framed Standard Construction

100.4 Framed Allwood Construction

100.5 Care and Maintenance

Framed Standard Construction

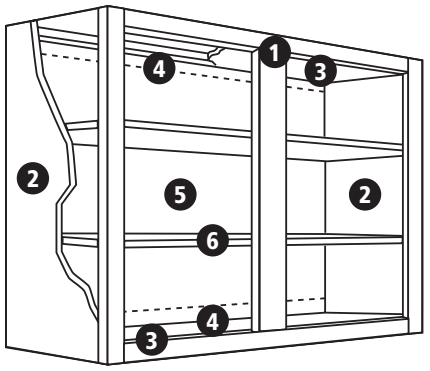

1 Front Frame

¾" thick kiln dried solid hardwood. Pocket screw construction frame joinery reinforced with staples. Stiles and rails 1½" wide. Mullions 3" wide. Stiles dadoed to receive ends.

2 End Panels

Standard: Nominal ½" (12mm) thick wood based composite panel with matching laminate exterior surfaces. Cabinets will come with light maple laminate interiors. All end panels are inserted into dado in face frame and recessed ¼".

Upgrade: Nominal ½" (12mm) thick multi-ply hardwood plywood with maple veneer (stain finishes) or matching laminate (paint and thermofoil finishes) on exterior surface and birch veneer on interior surface. All end panels are constructed with the same dado joinery as above and are recessed ¼".

3 Top/Bottom Panels

Nominal ½" (12mm) thick wood based composite panel with light maple laminate interior surfaces. Bottoms are supported at rear of base cabinet by nominal ½" (12mm) thick wood base composite panel, inserted into end panel dado.

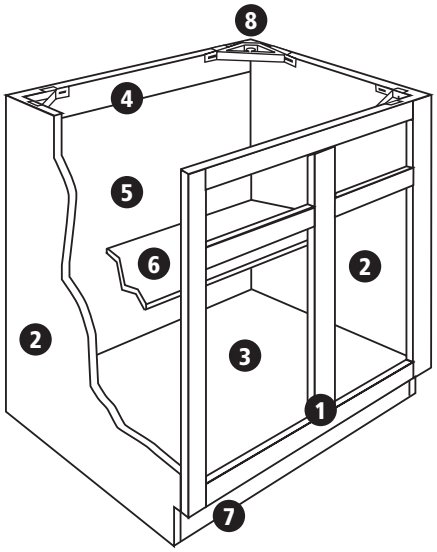

4 Hanging Rails

Constructed from nominal ½" (12mm) thick x 4¼" high wood based composite panel. Hanging rails run the full cabinet width at top for all cabinets; wall cabinets receive an additional hanging rail at the bottom. Hanging rails are captured between end panels and are recessed behind the back panel for wall cabinets and in front of back panels for base, vanity and tall cabinets.

5 Back Panel

Nominal ⅛" (3mm) thick hardboard with light maple laminate interior surface. Securely glued and stapled to end panels and hanging rails. Back panels are fully captured on wall cabinets.

6 Shelves

Nominal ¾" (19mm) thick wood based composite panel with light maple laminate on both faces and matching edgeband on facing edge. Shelves are adjustable in all standard cabinets. Wall and tall cabinets receive full depth shelves, base and vanity cabinets receive half depth shelves.

7 Toe Kick

Nominal ½" (12mm) thick unfinished wood based composite panel captured between end panels. Toe kick is 4½" high and recessed 3½".

8 Base Corner Braces

High impact injection molded plastic. NOTE: Drawings in this manual may not reflect corner braces.

Drawers

Front, back and sides are ⅝" (16mm) thick solid hardwood with dovetail construction. Drawer bottoms are a nominal ¼" (6mm) plywood veneer; bottoms are inserted into dado in front, back and sides.

Drawer Guides

High-quality epoxy coated steel, Cushion-Tec™, side mounted guides, self-adjusting in mounting brackets. Built-in stop, self-closing and stay-closed features with a 100 lb. rated load capacity.

Soft-Close Undermount Drawer Guide (Upgrade)

High-quality steel, undermount construction provides full drawer access. Self-adjusting in mounting brackets. Built-in stop, self-closing, and stay closed features with a 75 lb. rated load capacity. Provides soft-close feature that helps reduce drawer slamming.

Hinges

Standard: Heavy-duty, high-quality steel, concealed 6-way adjustable hinge with self-closing feature.

Upgrade: Gentle-Touch (soft-close) hinge – heavy-duty, high-quality steel, concealed 6-way adjustable hinge with soft close resistance.

NOTICE: The product specifications appearing herein supersede and cancel all previous sheets, supplements and addenda, and represent current manufacturing standards and procedures. Arbor Creek Cabinetry reserves the right to make specification changes for continued product improvement. For aesthetic considerations the furniture and cabinet industries have made veneer on composite panel substrate the standard method of construction for raised panel-in-frame doors in some wood species. Within the Arbor Creek Cabinetry product line, this includes orders in maple species.

Framed Allwood Construction

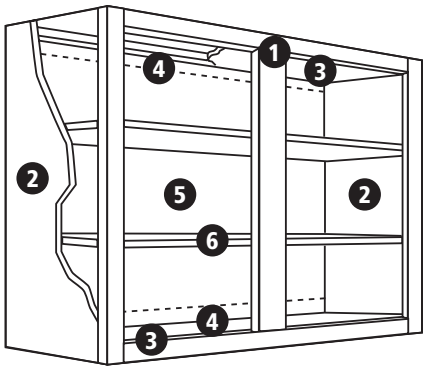

1 Front Frame

¾" thick kiln dried solid hardwood. Pocket screw construction frame joinery reinforced with staples. Stiles and rails 1½" wide. Mullions 3" wide. Stiles dadoed to receive ends.

2 End Panels

Standard: Nominal ½" (12mm) thick multi-ply birch veneer plywood with matching laminate exterior surfaces. End panels are inserted into dado in face frame and recessed ¼".

Upgrade: Nominal ½" (12mm) thick multi-ply hardwood plywood with maple veneer (stain finishes) or matching laminate (paint and thermofoil finishes) on exterior surface and birch veneer on interior surface. All end panels are constructed with the same dado joinery as above and are recessed ¼".

3 Top/Bottom Panels

Nominal ½" (12mm) thick multi-ply hardwood plywood. Tops and bottoms set into grooved end panels and stapled. Bottoms are supported at rear of base cabinets by nominal ½" (12mm) thick multi-ply hardwood plywood.

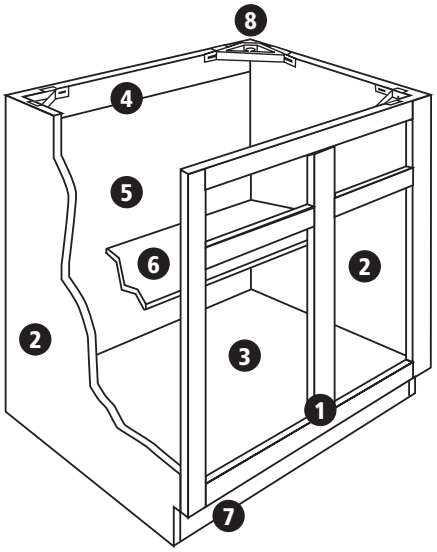

4 Hanging Rails

Constructed from nominal ½" (12mm) thick x 4¼" high multi-ply hardwood plywood. Hanging rails run the full cabinet width at top for all cabinets; wall cabinets receive an additional hanging rail at the bottom. Hanging rails are captured between end panels and are recessed behind the back panel for wall cabinets and in front of back panels for base, vanity and tall cabinets.

5 Back Panel

Nominal ⅛" (3mm) thick hardwood with maple grained interior. Securely glued and stapled to end panels and hanging rails. Back panels are fully captured on wall cabinets.

6 Shelves

Nominal ¾" (19mm) thick multi-ply hardwood plywood, with hardwood veneer banded front edge. Shelves are adjustable in all standard cabinets. Wall and tall cabinets receive full depth shelves; base and vanity cabinets receive half depth shelves.

7 Toe Kick

Nominal ½" (12mm) thick multi-ply hardwood plywood. Toe kick is 4½" high and recessed 3½".

8 Base Corner Braces

High impact, injection molded plastic. NOTE: Drawings in this manual may not reflect corner brace.

Drawers

Front, back and sides are ⅝" (16mm) thick solid hardwood with dovetail construction. Drawer bottoms are a nominal ¼" (6mm) plywood veneer; bottoms are inserted into dado in front, back and sides.

Drawer Guides

High-quality epoxy coated steel, Cushion-Tec™, side mounted guides, self-adjusting in mounting brackets. Built-in stop, self-closing and stay-closed features with a 100 lb. rated load capacity.

Soft-Close Undermount Drawer Guide (Upgrade)

High-quality steel, undermount construction provides full drawer access. Self-adjusting in mounting brackets. Built-in stop, self-closing, and stay closed features with a 75 lb. rated load capacity. Provides soft-close feature that helps reduce drawer slamming.

Hinges

Standard: Heavy-duty, high-quality steel, concealed 6-way adjustable hinge with self-closing feature.

Upgrade: Gentle-Touch (soft-close) hinge – heavy-duty, high-quality steel, concealed 6-way adjustable hinge with soft close resistance.

NOTICE: The product specifications appearing herein supersede and cancel all previous sheets, supplements and addenda, and represent current manufacturing standards and procedures. Arbor Creek Cabinetry reserves the right to make specification changes for continued product improvement. For aesthetic considerations the furniture and cabinet industries have made veneer on composite panel substrate the standard method of construction for raised panel-in-frame doors in some wood species. Within the Arbor Creek Cabinetry product line, this includes orders in maple species.

Care and Maintenance

Please follow these simple special care and maintenance guidelines which will allow you to enjoy your cabinets for many years to come.

- Wipe with a clean, soft, damp cloth and dry immediately. Never use kitchen cloths or sponges that might have detergent or grease on them, or embedded abrasives.
- To remove food residue or grease, use any common dishwashing liquid (not detergent) or solution of mild soap and water. Wipe with a clean damp cloth. Dry thoroughly.
- If a spill occurs, clean and dry immediately. Left unattended, a spill can soak through the cabinet surfaces and cause damage.

Your cabinets have been finished with a coating that exhibits excellent resistance to foods, beverages and household agents typically found in the kitchen or bath. However, from time to time, your cabinets will need regular cleaning and care.

- Clean at least once a month by wiping the surface with a clean, damp cloth, then dry immediately. Do not use a dishcloth for cleaning. It could contain remnants of grease or detergents. Never use soap pads, steel wool, or cleaners that contain bleach, ammonia, or abrasives. These agents may cause discoloration, marring or dulling of the finish. Do not wax or polish cabinet surfaces, wax build-up will leave a residue that is difficult to remove. Polishes containing silicone should not be used. Products such as Murphy® Oil Soap contain no wax, petroleum or silicones.
- Excess moisture can damage any cabinet finish; areas near the sink, range, dishwasher, oven and baseboards are most susceptible. With all cabinets, take a little extra care on bottom edges of base cabinets and base cabinet doors where invisible moisture often collects. Keep these surfaces dry.
- Avoid draping damp cloths or dish towels over the cabinet doors. Over a period of time, this moisture could cause permanent damage to your cabinet finish.

Thermofoil Laminate Surfaces

Periodically clean the surface using a soft, dampened cloth. Most non-abrasive cleaners are ideal for these surfaces; tough stains may be cleaned using a soft cloth dampened with a mild type cleanser. However, cleaners with acetone, ethyl alcohol or mineral oils should not be used. Do not wax or polish these surfaces.

Decorative Pulls and Knobs

Use a soft cloth and warm water only to clean door and drawer hardware. After cleaning, dry all hardware joints and surfaces and surrounding area with a clean, soft cloth, and buff hardware with the same.

Caution

Using cleaners, polishes or other chemicals will attack the finish causing damage to the appearance of your hardware.

ARBOR | CREEK®

CABINETRY

200

DOOR STYLES & FINISHES

In This Section

200.3 Wood Species and Material Information

200.4 Finish Information

200.5 Finish / Color Charts

200.6 Door Styles, Wood Species/Material and Price Group Chart

200.7 Door Styles

Wood Species and Material Information

MAPLE has a smooth texture with tight, uniform grain patterns. It is generally creamy white, varying slightly from almost bright white to light pink or reddish brown. Maple contains a natural resin that causes wood to turn amber as it ages. This change, which is accelerated by exposure to natural light, is more noticeable with lighter stains. Maple may occasionally contain small mineral streaks that form naturally when trees absorb minerals from the soil.

PAINT GRADE doors, drawer fronts, cabinet components, moldings and accessories may feature hardwood, engineered materials (such as MDF) or a combination of both to create a beautifully finished and durable product. MDF center panels may be used on painted door styles. Unless otherwise noted, the primary material for slab doors or doors with stiles/rails will be HDF; see Sayers, Selway and Vernon door styles for exceptions. Paint grade products have certain inherent characteristics that must be expected. Small hairline cracks may appear at joinery points on doors, drawer fronts, cabinet frames, etc. Also, some grain patterns of wood may be apparent through painted finishes. Painted finishes should be expected to show a slight color change over time. These characteristics are inherent and will not be considered defective.

Why is this important?

We call your attention to these characteristics because the effects of these variations in an entire room may be different from what one visualizes when viewing a small display, a single door or a small sample. Most wood parts are constructed using different pieces of wood; each piece will accept stain in different ways. These variations in grain and color are inherent in the wood and are a natural enhancement to our product.

Arbor Creek feels the beauty of real hardwood is created by the infinite variation of grain texture and color. This is the nature of hardwood and wild or unusual graining will not be considered reason for replacement. In addition, we take care in selecting our doors. There is, however, no special emphasis made to select doors to match one another. Contrasting grain or color variations in doors is considered acceptable and will not be considered reason for replacement. Wood cabinetry is also affected by humidity. Warpage and shrinking may be caused by changes of humidity in the home. We recommend the use of an air conditioner and humidifier to control the humidity of the home.

Thermofoil Laminate

Finish options: Solid

Thermofoil laminate doors and drawer fronts are ⅝" thick medium density fiberboard (MDF). The front and four edges of doors and drawers are covered with thermofoil laminate material. Doors are backed with low pressure melamine in a light woodgrain print complementing the interior of the cabinet.

Thermofoil laminate has consistent color and surface quality from edge to edge. Thermofoil laminate is made from PVC, which is one of the most versatile polymers. It prints and laminates very well and can accept a variety of coatings. A protective peel coat is applied to some thermofoil laminate product. Please remove after cabinet installation, but prior to decorative hardware installation (use fingernail, not sharp objects to remove).

High heat generated from the self-cleaning cycle of ovens or ranges may discolor thermofoil laminate cabinetry. It is highly recommended to use a heat shield (see Section 700) or open the doors and drawers fully while running the self-cleaning cycle. Damage caused by excessive heat is not covered by warranty.

Finish Information

Stain Finishes

Rich, appealing tones and distinctive wood grain character are your assurance of lasting beauty with Arbor Creek's exclusive 17-step stain finishing process.

1 2 3

Our 17-step process begins with a thorough machine and handsanding of all surfaces, and the mechanical removal of all dust particles. Infrared heat is then introduced to the product surface to achieve consistent color development year-round.

4

Next, pre-stain toners are applied evenly to provide base color uniformity.

5 6 7

Specially formulated stains are hand-sprayed, dried gradually, and sealed with a chemical resistant compound on the product's face and back to retain consistency.

8 9 10 11

Sealed products are treated with an ambient air temp flash off in a slow-dry oven and hot oven baked to ensure a complete cure. Sealed surfaces are then machine and hand-sanded with ultra-fine sandpaper and quality inspected for cleanliness and smoothness.

12 13 14 15 16 17

Dust particles are mechanically removed and product backs are mechanically sprayed with a conversion finish topcoat. Products go through ambient air temp flash off in a slow-dry oven, and then hot oven baked for a complete cure throughout. Any dust particles are mechanically removed, then product fronts are mechanically sprayed with a conversion finish topcoat. Products go through ambient air temp flash off in a slow-dry oven, and then hot oven baked for a complete cure throughout.

Paint Finishes

Arbor Creek's exclusive 11-step paint finishing technique guarantees smooth, consistent color and durable quality to deliver striking designs that last for decades.

1 2

During the 11-step process, all surfaces are machine and handsanded, and dust particles are mechanically removed.

3 4 5 6 7 8

Catalyzed primer (varnish) is hand-sprayed. Products go through ambient air temp flash off in a slow dry oven, then hot oven baked to ensure a complete cure of primer coat. Cured primer product is hand-sanded with fine grit sandpaper to desired smoothness. Excess dust is then removed with high pressure compressed air in preparation for the final enamel coat.

9 10 11

Catalyzed enamel topcoat is hand-sprayed. Products go through ambient air temp flash off in a slow dry oven, then hot oven baked to ensure a complete cure throughout.

Painted cabinets may feature a combination of hardwood and engineered materials to create a beautifully finished product. Painted drawer fronts, door stiles, door rails, and/or door center panels may be constructed of medium density fiberboard (MDF). Due to the natural expansion and contraction of wood, visible joint lines may appear.

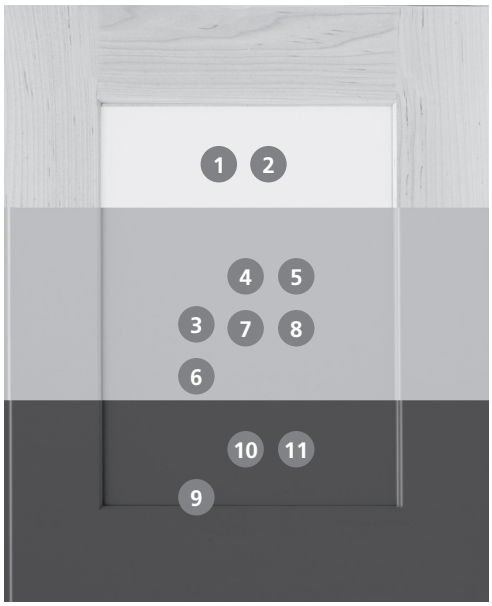

Finish Charts

STAIN FINISHES

FINISH OPTIONS	FINISH CHARGE	MAPLE	PAINT GRADE
Coffee*	no upcharge	◆	
Espresso*	no upcharge	◆	
Graphite	no upcharge	◆	
Nebbia*	no upcharge	◆	
Nuvoloso	no upcharge	◆	
Pecan*	no upcharge	◆	
Slate	no upcharge	◆	

PAINT

FINISH OPTIONS	FINISH CHARGE	MAPLE	PAINT GRADE
Dove Grey*	15%		◆
Dover White	15%		◆
Grigio Grey*	15%		◆

THERMOFOIL LAMINATE

COLOR	THERMOFOIL LAMINATE DOOR STYLES
Bianco White*	◆
Fog Grey*	◆

DESIGN NOTE

Remember to specify matching plywood end modifications for cabinets with exposed ends for best final result. Matching plywood ends in stain finishes receive finished veneer; paint and thermofoil laminate options receive laminated plywood.

◆ Species/finish combination available. Receives complementary laminate ends; matching plywood end modifications **recommended** for exposed cabinet ends for best match in finish and species.

***These finishes will be available in the 3rd Quarter of 2022. Watch for further communication with the exact availability date.**

DOOR STYLES, WOOD SPECIES/MATERIAL AND PRICE GROUPS

DOOR STYLE	OVERLAY	MAPLE	PAINT GRADE	THERMOFOIL LAMINATE
Hammond – Slab Drawer Front	Full Overlay	3	3	
Hammond – 5 Piece Drawer Front	Full Overlay	4	4	
Holston	Full Overlay	3	3	
Holston	Half Overlay	2	2	
Laurel	Full Overlay	3	3	
Maiden	Half Overlay	3	3	
Mazon	Full Overlay			2
Nolin	Half Overlay	1		
Sayers	Full Overlay	4	4	
Sayers	Half Overlay	3	3	
Selway	Full Overlay	3	3	
Selway	Half Overlay	2	2	
Vernon	Full Overlay	4	4	
Vernon	Half Overlay	3	3	

Refer to individual door style pages for availability dates.

Hammond
Full Overlay

- ¾" thick door frames and drawer fronts.
- Shaker door with 3" rails and stiles.
- Veneer flat center panel, HDF door for paint finishes.
- Assembled with 5-piece mortise and tenon joinery.
- Available with slab or 5-piece drawer fronts; specify appropriate door code.

Wood Species/Material	Door Code	Price Group
FULL OVERLAY – SLAB DRAWER FRONT		
Maple	HAMFM043	3
Paint Grade	HAMFG123	3
FULL OVERLAY – 5 PIECE DRAWER FRONT		
Maple	HAMFM042	4
Paint Grade	HAMFG122	4

***Watch for further communication with the exact availability date for this door style.**

Holston
Full Overlay & Half Overlay

- ¾" thick door frames and drawer fronts.
- Shaker door with 2¼" rails and stiles.
- Veneer flat center panel, HDF door for paint finishes.
- Assembled with 5-piece mortise and tenon joinery.
- Slab drawer fronts.

Wood Species/Material	Door Code	Price Group
FULL OVERLAY		
Maple	HOLFM049	3
Paint Grade	HOLFG128	3
HALF OVERLAY		
Maple	HOLSM089	2
Paint Grade	HOLSG168	2

Laurel
Full Overlay

- ⅝" thick doors and drawer fronts.
- Slab door style; veneer edgebanded door for stain finishes; HDF door for paint finishes.
- Slab drawer fronts.

Wood Species/Material	Door Code	Price Group
FULL OVERLAY		
Maple	LAUFM054	3
Paint Grade	LAUFG133	3

Maiden
Half Overlay

- ¾" thick door frames and drawer fronts.
- Solid door with routed raised panel design, HDF door for paint finishes.
- Slab drawer fronts.

Wood Species/Material	Door Code	Price Group
HALF OVERLAY		
Maple	MAISM081	3
Paint Grade	MAISG161	3

Mazon
Full Overlay

- ⅝" thick door frames and drawer fronts.
- Shaker style thermofoil laminate door with 2¼" rails and stiles.
- Doors are backed with low pressure melamine in a light woodgrain print complementing the interior of the cabinet.
- Slab drawer fronts.

Wood Species/Material	Door Code	Price Group
FULL OVERLAY		
Thermofoil Laminate	MAZFR021	2

Nolin
Half Overlay

- ¾" thick door frames and drawer fronts.
- 1⅞" rails and stiles.
- Veneer flat center panel.
- Assembled with miter construction.
- Slab drawer fronts.

Wood Species/Material	Door Code	Price Group
HALF OVERLAY		
Maple	NOLSM084	1

***Watch for further communication with the exact availability date for these door styles.**

Sayers
Full Overlay & Half Overlay

- ¾" thick door frames and drawer fronts.
- 2¼" rails and stiles.
- Veneer raised center panel; painted product may receive MDF center panels.
- Assembled with 5-piece mortise and tenon joinery.
- Slab drawer fronts.
- Painted doors use hardwood material for the rails and stiles.

Wood Species/Material	Door Code	Price Group
FULL OVERLAY		
Maple	SAYFM046	4
Paint Grade	SAYFG125	4
HALF OVERLAY		
Maple	SAYSM086	3
Paint Grade	SAYSG165	3

Selway
Full Overlay & Half Overlay

- ¾" thick door frames and drawer fronts.
- 2¼" rails and stiles.
- Veneer flat center panel; painted product may receive MDF center panels.
- Assembled with 5-piece mortise and tenon joinery.
- Slab drawer fronts.
- Painted doors use hardwood material for the rails and stiles.

Wood Species/Material	Door Code	Price Group
FULL OVERLAY		
Maple	SELFM045	3
Paint Grade	SELFG124	3
HALF OVERLAY		
Maple	SELSM085	2
Paint Grade	SELSG164	2

Vernon
Full Overlay & Half Overlay

- ¾" thick doors and drawer fronts.
- Slab door style.
- Solid wood door for stain finishes; solid wood door for paint finishes.
- Slab drawer fronts.

Wood Species/Material	Door Code	Price Group
FULL OVERLAY		
Maple	VERFM053	4
Paint Grade	VERFG132	4
HALF OVERLAY		
Maple	VERSM093	3
Paint Grade	VERSG172	3

***Watch for further communication with the exact availability date for these door styles.**

ARBOR | CREEK®

CABINETRY

300

WALL CABINETS

In This Section

300.3 12" and 24" Deep Wall Cabinets

300.4 Corner Wall Cabinets, Wall Blind Corner Cabinets

300.5 Microwave Wall Cabinets, Spice Storage, Wine Storage

300.6 Range Hood, Range Hood Chimney, Range Hood Blower

Wall Cabinets

- Adjustable shelf quantities listed in ( ) below.
- 12-36" high wall cabinets receive two hinges per door; 42" high wall cabinets receive three hinges per door.
- 6-24" altered depth modification available.

12" Deep

Single Door

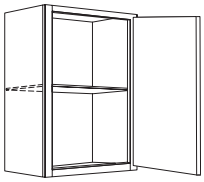

24" High (1)
- W1224 L or R
- W1524 L or R
- W1824 L or R
- W2124 L or R

30" High (2)
- W0930 L or R
- W1230 L or R
- W1530 L or R
- W1830 L or R
- W2130 L or R

36" High (2)
- W0936 L or R
- W1236 L or R
- W1536 L or R
- W1836 L or R
- W2136 L or R

42" High (3)
- W0942 L or R
- W1242 L or R
- W1542 L or R
- W1842 L or R
- W2142 L or R

Butt Doors

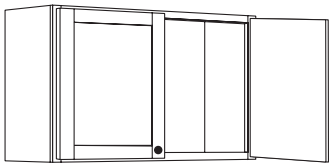

12" High (0)
- W2412D
- W2712D
- W3012D
- W3312D
- W3612D

15" High (0)
- W2415D
- W2715D
- W3015D
- W3315D
- W3615D

18" High (0)
- W2418D
- W2718D
- W3018D
- W3318D
- W3618D

21" High (0)
- W2721D
- W3021D
- W3321D
- W3621D

24" High (1)
- W2424D
- W2724D
- W3024D
- W3324D
- W3624D

27" High (1)
- W3027D
- W3327D
- W3627D

30" High (2)
- W2430D
- W2730D
- W3030D
- W3330D
- W3630D

36" High (2)
- W2436D
- W2736D
- W3036D
- W3336D
- W3636D

42" High (3)
- W2442D
- W2742D
- W3042D
- W3342D
- W3642D

Double Doors

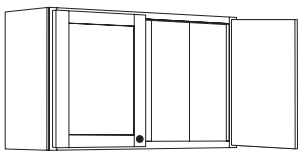

12" High (0)
- W3912

15" High (0)
- W3915

18" High (0)
- W3918
- W4218
- W4518
- W4818

21" High (0)
- W3921

24" High (1)
- W3924
- W4224
- W4524
- W4824

27" High (1)
- W3927

30" High (2)
- W3930
- W4230

36" High (2)
- W3936
- W4236

42" High (3)
- W3942
- W4242

24" Deep

Butt Doors

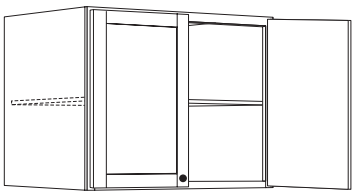

12" High (0)
- W241224D
- W271224D
- W301224D
- W331224D
- W361224D

15" High (0)
- W241524D
- W271524D
- W301524D
- W331524D
- W361524D

18" High (0)
- W241824D
- W271824D
- W301824D
- W331824D
- W361824D

21" High (0)
- W242124D
- W272124D
- W302124D
- W332124D
- W362124D

24" High (1)
- W242424D
- W272424D
- W302424D
- W332424D
- W362424D

Double Doors

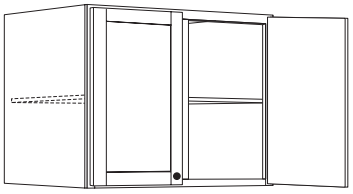

12" High (0)
- W391224

15" High (0)
- W391524

18" High (0)
- W391824

21" High (0)
- W392124

24" High (1)
- W392424

Corner Wall Cabinets

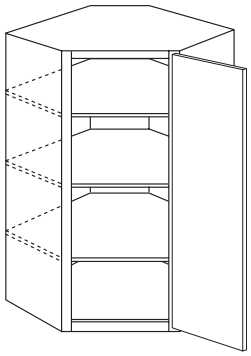

- Adjustable shelf quantities listed in ( ) below.
- 30-36" high wall cabinets receive two hinges per door; 42" high wall cabinets receive three hinges per door.
- Requires 24" or 27" of wall space on each side.
- Doors are always 15½" wide regardless of overlay.
- Altered depth modification not available.

Single Door

30" High (2)
- CWC2430 L or R
- CWC2730 L or R

36" High (2)
- CWC2436 L or R
- CWC2736 L or R

42" High (3)
- CWC2442 L or R
- CWC2742 L or R

Wall Blind Corner Cabinets, 12" Deep

- Adjustable shelf quantities listed in ( ) below.
- 30-36" high wall cabinets receive two hinges per door; 42" high wall cabinets receive three hinges per door.
- SKUs ending in **L** specify blind left; SKUs ending in **R** specify blind right.
- 6-24" altered depth modification available.
- Cabinet front only modification not available.

Single Door

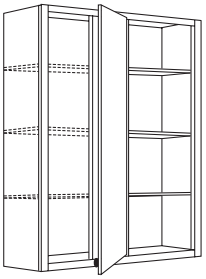

30" High (2)
- WB2430 L or R
- WB2730 L or R
- WB3030 L or R
- WB3330 L or R

36" High (2)
- WB2436 L or R
- WB2736 L or R
- WB3036 L or R
- WB3336 L or R

42" High (3)
- WB2442 L or R
- WB2742 L or R
- WB3042 L or R
- WB3342 L or R

- Hinge location is same as blind location. EXAMPLE: WB2430L specifies hinge left, blind left.

Front View

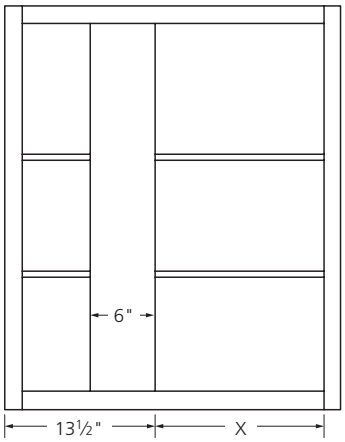

Butt Doors

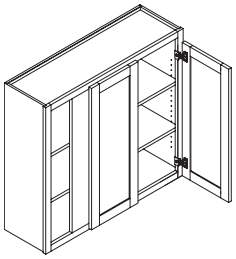

30" High (2)
- WB3630D L or R
- WB3930D L or R
- WB4230D L or R
- WB4530D L or R
- WB4830D L or R

36" High (2)
- WB3636D L or R
- WB3936D L or R
- WB4236D L or R
- WB4536D L or R
- WB4836D L or R

42" High (3)
- WB3642D L or R
- WB3942D L or R
- WB4242D L or R
- WB4542D L or R
- WB4842D L or R

Cabinet Width	Actual Cabinet Width	Door Opening Width (X)	Blind Panel Width	Max Distance from Wall	Reversible
24"	24"	9"	6"	3"	Yes
27"	27"	12"	6"	3"	Yes
30"	30"	15"	6"	3"	Yes
33"	33"	18"	6"	3"	Yes
36"	36"	21"	6"	3"	Yes
39"	39"	24"	6"	3"	Yes
42"	42"	27"	6"	3"	Yes
45"	45"	30"	6"	3"	Yes
48"	48"	33"	6"	3"	Yes

Microwave Wall Cabinets

- Includes matching interior.
- 15" microwave shelf is shipped separately.
- 15-24" altered depth modification available.
  NOTE: Shelf is eliminated when altered depth modification is applied.
- Cabinet front only modification not available.

No Door, 15" Deep Shelf

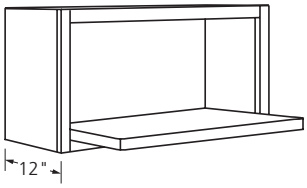

18" High

- MWC2418
- MWC2718
- MWC3018

Butt Doors, 15" Deep Shelf

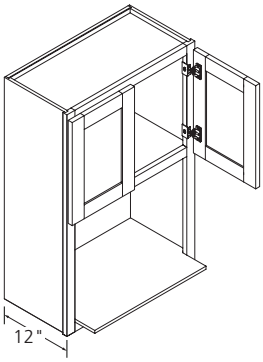

- Two hinges per door.
- Adjustable top section shelf quantities listed in ( ) below.
- Top section height:
  – 30" high cabinet top section aligns with a 12" high wall cabinet
  – 36" high cabinet top section aligns with a 18" high wall cabinet
  – 42" high cabinet top section aligns with a 24" high wall cabinet

30" High (0)

- MWC2430D
- MWC2730D
- MWC3030D

36" High (0)

- MWC2436D
- MWC2736D
- MWC3036D

42" High (1)

- MWC2442D
- MWC2742D
- MWC3042D

Spice Drawer Cabinets

- SD24 4 Drawers
- SD30 5 Drawers
- SD36 6 Drawers

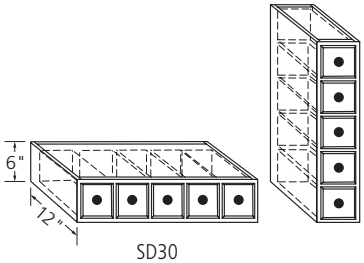

SD30

- Includes matching interior.
- Altered depth and plywood end modifications not available.
- Drawer sets convert to horizontal or vertical usage.
- Drawer front profiles are generic eased edge profile and do not necessarily match door profile.
- Clear coat wood pull-out spice drawers are set loose in opening without drawer guides.
- Decorative hardware is required; purchase hardware separately.

Wine Cube Cabinets

- WCUBE24 4 Cubes
- WCUBE30 5 Cubes
- WCUBE36 6 Cubes

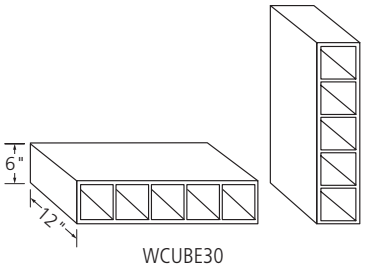

WCUBE30

- Includes matching interior.
- Wine cubes convert to horizontal or vertical usage.
- Altered depth, plywood end and cabinet front only modifications not available.

Wine Rack Lattice Cabinets, 12" Deep

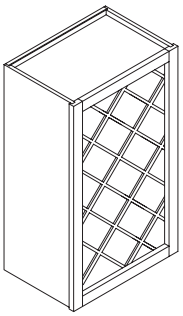
WRL1830

- Includes matching interior.
- Altered depth and cabinet front only modifications not available.

15" High	Bottle Qty
WRL3015	10
WRL3615	15

18" High	Bottle Qty
WRL3018	10

30" High	Bottle Qty
WRL1830	10
WRL2430	18

Crossmate Wine Storage Wall Cabinet, 12" Deep

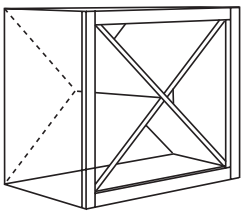

- Includes matching interior.
- Altered depth, plywood end and cabinet front only modifications not available.

24" High

- WRX2424

Range Hood Chimney

■ WHC30

- Shipped with silver metallic powder-coated metal liner.
- Blower units must be ordered separately; see BUF20SM.
- Chimney stack must be ordered separately; see WHCS3023.
- Modifications not available.

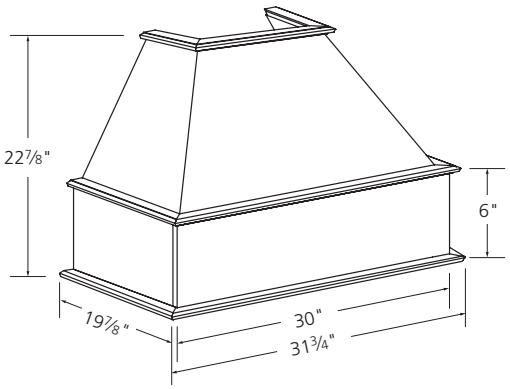

Range Hood Chimney Stack

■ WHCS3023

- Compatible with range hood WHC30.
- Blower units must be ordered separately.
- Chimney is three sided with support brace for back.
- Modifications not available.

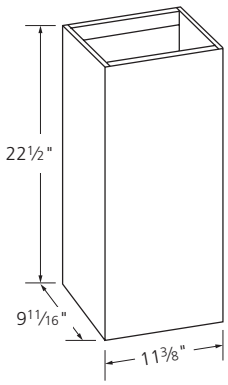

Range Hood 390 CFM Blower Unit

■ BUF20SM

- Silver metallic.
- Centrifugal blower, 390 CFM, 6.0 sones.
- Multi-speed control.
- 6" round duct connector/back draft damper.
- Enclosed light.
- Accepts two incandescent 40-watt maximum candelabra bulbs; purchase bulbs separately.
- Durable, powder coated silver finish.
- Fully enclosed bottom.
- Compatible with range hood WHC30.
- Modifications not available.

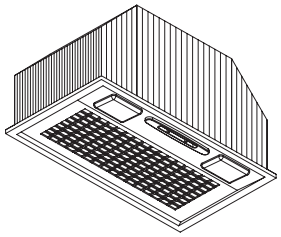

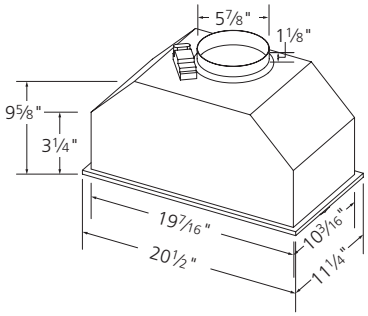

ARBOR | CREEK®

CABINETRY

400

BASE CABINETS

In This Section

400.3 Base Cabinets, Base Cabinets with Full Height Doors

400.4 Base Cabinets with Roll-Out Trays

400.5 Sink Base Cabinets

400.6 Removable Sink Base Cabinets, Sink Fronts, Base Blind Corner Cabinets

400.7 Corner Base Cabinets, Lazy Susan Corner Base Cabinets, Diagonal Corner Base Cabinets

400.8 Triple Drawer Base Cabinets, Double Drawer Range Base Cabinets, Single Drawer Range Riser Base Cabinets, Single Drawer Microwave Base Cabinets

400.9 Trash Can Pull-Out Base Cabinets, Base Wine Cube Cabinets

Base Cabinets, 24" Deep, 34½" High

- Includes one half-depth adjustable shelf.
- Includes two hinges per door.
- 18-21" altered depth modification available.
- Matching interior modification not available.
- For 32" high universal cabinet:
  - With 4½" high toe kick add UD to end of SKU.
    EXAMPLES: B12UDL* (single door), B24DUD (butt doors), B39UD (double doors).
  - With 9" high toe kick add UD9TK to end of SKU.
    EXAMPLES: B12UD9TKL* (single door), B24DUD9TK (butt doors), B39UD9TK (double doors).

*Note exception for single door cabinets, hinge location is at end of SKU after UD or UD9TK.

Single Door, One Drawer

- B09 L or R
- B12 L or R
- B15 L or R
- B18 L or R
- B21 L or R

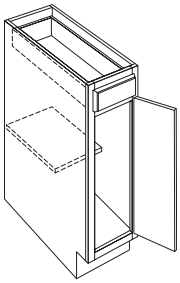

Butt Doors, One Drawer

- B24D
- B27D
- B30D
- B33D
- B36D

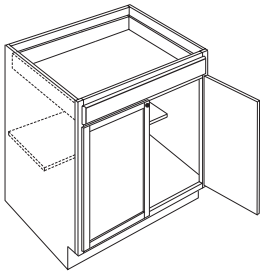

Double Doors, Two Drawers

- B39
- B42
- B45
- B48

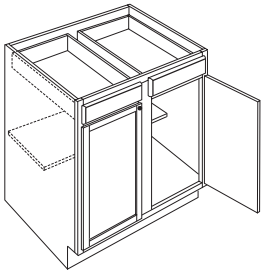

Base Cabinets with Full Height Door(s), 24" Deep, 34½" High

- Includes one half-depth adjustable shelf.
- Includes two hinges per door.
- 12-21" altered depth modification available.
- Matching interior modification not available.
- For 32" high universal cabinet:
  - With 4½" high toe kick add UD to end of SKU.
    EXAMPLES: FHB12UDL* (single door), FHB24DUD (butt doors), FHB39UD (double doors).
  - With 9" high toe kick add UD9TK to end of SKU.
    EXAMPLES: FHB12UD9TKL* (single door), FHB24DUD9TK (butt doors), FHB39UD9TK (double doors).

*Note exception for single door cabinets, hinge location is at end of SKU after UD or UD9TK.

Single Door

- TB09 L or R
- FHB12 L or R
- FHB15 L or R
- FHB18 L or R
- FHB21 L or R

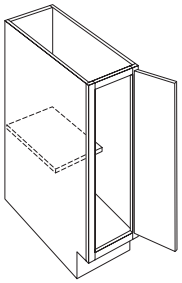

Butt Doors

- FHB24D
- FHB27D
- FHB30D
- FHB33D
- FHB36D

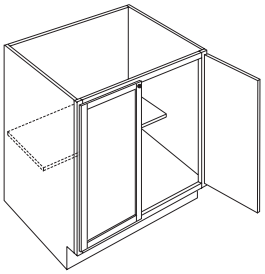

Double Doors

- FHB39
- FHB42
- FHB45
- FHB48

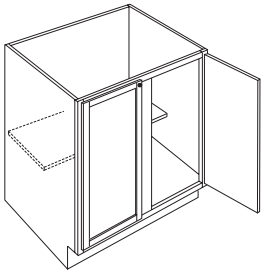

Base Cabinets with Roll-Out Trays, 24" Deep, 34½" High

- Includes two hinges per door.
- Includes two 3⅜" high dovetail roll-out trays with side-mount guides.
- Standard or full extension soft-close guides available on top drawer.
- 18-21" altered depth modification available.
- Matching interior and full depth shelf modifications not available.
- For 32" high universal cabinet:
  – With 4½" high toe kick add UD to end of SKU. EXAMPLES: B12ROT2UDL* (single door), B24DROT2UD (butt doors).
  – With 9" high toe kick add UD9TK to end of SKU. EXAMPLES: B12ROT2UD9TKL* (single door), B24DROT2UD9TK (butt doors).

*Note exception for single door cabinets, hinge location is at end of SKU after UD or UD9TK.

Single Door, One Drawer

- B09R0T2 L or R
- B12R0T2 L or R
- B15R0T2 L or R
- B18R0T2 L or R
- B21R0T2 L or R

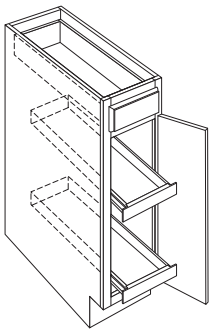

Butt Doors, One Drawer

- B24DROT2

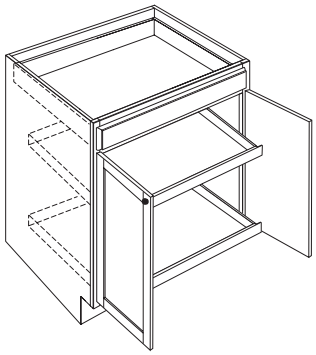

Single Full Height Door

- FHB09ROT2 L or R
- FHB12ROT2 L or R
- FHB15ROT2 L or R
- FHB18ROT2 L or R
- FHB21ROT2 L or R

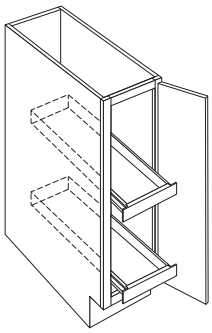

Sink Base Cabinets, 24" Deep, 34½" High

- Includes two hinges per door.
- Includes full back in cabinet. Plumbing accommodations must be made at time of installation.
- Shelving not included.
- 12-21" altered depth modification available.
- Matching interior modification not available.
- For 32" high universal cabinet:
  – With 4½" high toe kick add UD to end of SKU. EXAMPLES: SB18UDL* (single door), SB24DUD (butt doors), SB39UD (double doors).
  – With 9" high toe kick add UD9TK to end of SKU. EXAMPLES: SB18UD9TKL* (single door), SB24DUD9TK (butt doors), SB39UD9TK (double doors).

*Note exception for single door cabinets, hinge location is at end of SKU after UD or UD9TK.

Single Door, One False Drawer Front

- SB18 L or R
- SB21 L or R

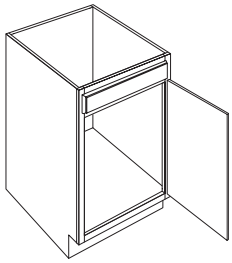

Single Full Height Door

- FHSB18 L or R
- FHSB21 L or R

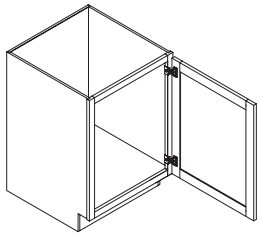

Butt Doors, One False Drawer Front

- SB24D
- SB27D
- SB30D
- SB33D
- SB36D

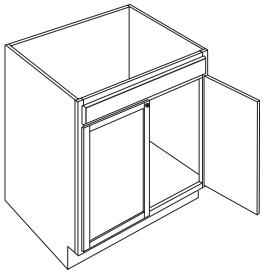

Full Height Butt Doors

- FHSB24D
- FHSB27D
- FHSB30D
- FHSB33D
- FHSB36D

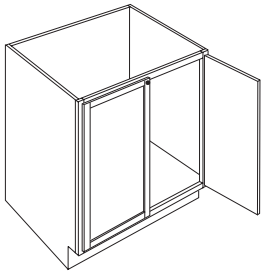

Double Doors, Two False Drawer Fronts

- SB39
- SB42
- SB45
- SB48

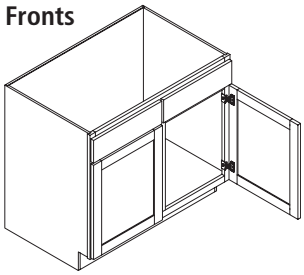

Full Height Double Doors

- FHSB39
- FHSB42
- FHSB45
- FHSB48

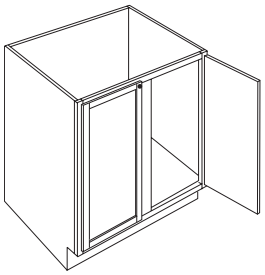

Removable Sink Base Cabinets, 24" Deep, 34½" High

- Includes two hinges per door.
- Plumbing skirt is finished to match cabinet exterior.
- Shelving and cabinet back not included.
- Includes removable base with insert.
- Altered depth, matching interior and cabinet front only modifications not available.
- For 32" high universal cabinet:
  – With 4½" high toe kick add UD to end of SKU.
  EXAMPLE: REMSB30UD
  – With 9" high toe kick add UD9TK to end of SKU.
  EXAMPLE: REMSB30UD9TK

Double Doors, Two False Drawer Fronts

- REMSB30
- REMSB33
- REMSB36
- REMSB39
- REMSB42
- REMSB45
- REMSB48

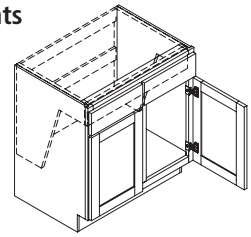

Sink Fronts

- Includes two hinges per door.
- Does not include toe kick.
- Modifications not available.
- For 32" high universal cabinet:
  – With 4½" high toe kick add UD to end of SKU.
  EXAMPLE: SF30DUD.
  – With 9" high toe kick add UD9TK to end of SKU
  EXAMPLE: SF30DUD9TK
  – NOTE: Front height will be adjusted to align with 32" high UD or UD9TK cabinets; toe kick is excluded.

Butt Doors, One False Drawer Front

- SF30D
- SF36D

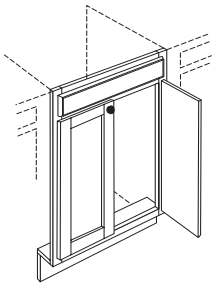

Full Height Butt Doors

- FHSF30D
- FHSF36D

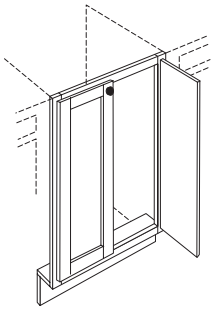

Base Blind Corner Cabinets, 24" Deep, 34½" High

- Includes two hinges per door.
- Includes one half depth adjustable shelf.
- SKUs ending in **L** specify blind left, hinge left; SKUs ending in **R** specify blind right, hinge right.
- 18-21" altered depth modification available.
- Matching interior and cabinet front only modifications not available.
- For 32" high universal cabinet:
  – With 4½" high toe kick add UD to end of SKU.
  EXAMPLE: BB36UDL*
  – With 9" high toe kick add UD9TK to end of SKU.
  EXAMPLE: BB36UD9TKL*

*Note for single door cabinets, hinge location is at end of SKU after UD or UD9TK.

Single Door, One Drawer

- BB36 L or R
- BB39 L or R
- BB42 L or R
- BB45 L or R
- BB48 L or R

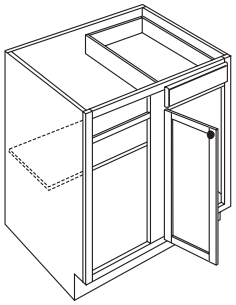

Front View

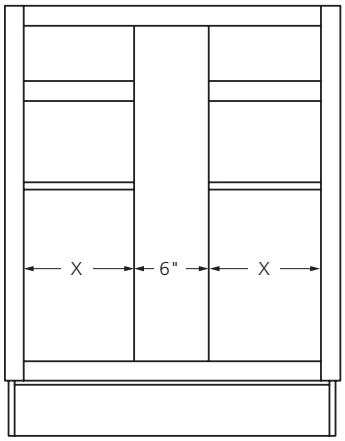

X dimension is equal; see BB48 for exception.

Cabinet Width	Actual Cabinet Width	Door Opening Width (X)	Blind Panel Width	Max Distance from Wall	Reversible
36"	27"	9"	6"	13½"	Yes
39"	33"	12"	6"	10½"	Yes
42"	39"	15"	6"	7½"	Yes
45"	45"	18"	6"	4½"	Yes
48"	48"	21"* Left or Right	6"	1½"	No

*BB48 is not reversible; blind opening is 18", door opening (X) is 21".

Corner Base Cabinets, 34½" High

- Cabinet doors are attached to end panel with three hinges.
- Includes full height doors; doors are attached together with one piano hinge.
- Includes one adjustable shelf.
- Requires 36" of wall space on each side.
- End panels are not finished.
- Altered depth, matching interior and full depth shelf modifications not available.
- For 32" high universal cabinet:
  – With 4½" high toe kick add UD to end of SKU.
    EXAMPLE: CBC36UDL*
  – With 9" high toe kick add UD9TK to end of SKU.
    EXAMPLE: CBC36UD9TKL*

*Note for single door cabinets, hinge location is at end of SKU after UD or UD9TK.

Two Full Height Doors

■ CBC36 L or R

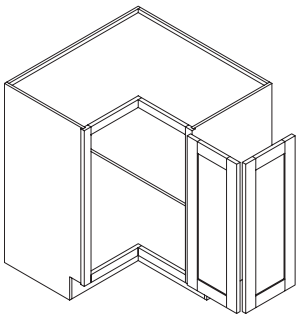

Lazy Susan Corner Base Cabinets, 34½" High

- Includes two 24" pie cut shelves.
- Cabinet doors are attached to Lazy Susan hardware.
- Includes full height inset doors.
- Requires 36" of wall space on each side.
- End panels are not finished.
- Altered depth and matching interior modifications not available.
- For 32" high universal cabinet:
  – With 4½" high toe kick add UD to end of SKU.
    EXAMPLE: LSB36UD
  – With 9" high toe kick add UD9TK to end of SKU.
    EXAMPLE: LSB36UD9TK

Two Full Height Rotating Doors

■ LSB36

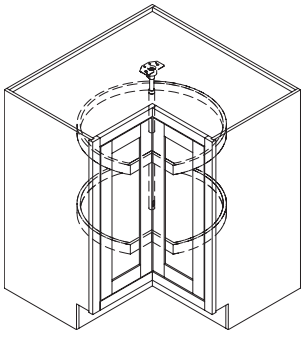

Diagonal Corner Base Cabinets, 34½" High

- Includes two hinges per door.
- Shelving not included.
- Requires 36" or 42" of wall space on each side.
- Altered depth and matching interior modifications not available.
- For 32" high universal cabinet:
  – With 4½" high toe kick add UD to end of SKU.
    EXAMPLE: DCB36UDL*
  – With 9" high toe kick add UD9TK to end of SKU.
    EXAMPLE: DCB36UD9TKL*

*Note for single door cabinets, hinge location is at end of SKU after UD or UD9TK.

Single Door, One False Drawer Front

■ DCB36 L or R
■ DCB42 L or R

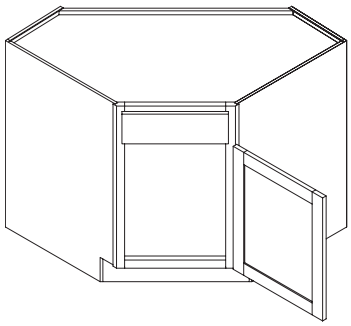

Triple Drawer Base Cabinets, 24" Deep, 34½" High

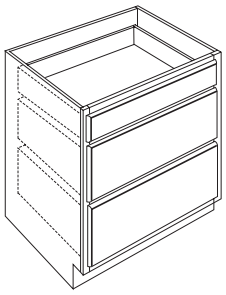

- Includes standard top drawer and two bottom deep drawers.
- 18-21" altered depth modification available.
- Plywood bottom and matching interior modifications not available.
- For 32" high universal cabinet:
  - With 4½" high toe kick add UD to end of SKU. EXAMPLE: DB309UD
  - With 9" high toe kick add UD9TK to end of SKU. EXAMPLE: DB309UD9TK
  - NOTE: when UD or UD9TK modification is applied drawer height will be reduced equally on bottom two drawers; top drawer height remains the same.

- DB309
- DB312
- DB315
- DB318
- DB321
- DB324
- DB327
- DB330
- DB333
- DB336

Double Drawer Range Base Cabinets, 24" Deep, 34½" High

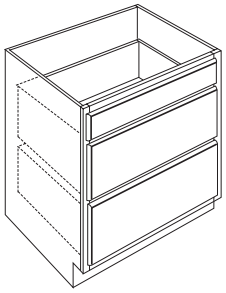

- Includes false top drawer front and two bottom deep drawers.
- Altered depth, plywood bottom and matching interior modifications not available.
- For 32" high universal cabinet:
  - With 4½" high toe kick add UD to end of SKU. EXAMPLE: RDB330UD
  - With 9" high toe kick add UD9TK to end of SKU. EXAMPLE: RDB330UD9TK
  - NOTE: when UD or UD9TK modification is applied drawer height will be reduced equally on bottom two drawers; false top drawer front height remains the same.

- RDB330
- RDB333
- RDB336

Single Drawer Range Riser Base Cabinets, 24" Deep, 11½" High

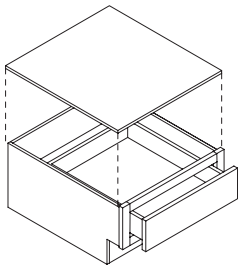

- Top shelf ships loose.
- Altered depth, plywood bottom, matching interior and cabinet front only modifications not available.
- Not available with 9" high toe kick (UD9TK).

- RRB2112
- RRB2412
- RRB2712
- RRB3012

Single Drawer Microwave Base Cabinets, 24" Deep, 34½" High

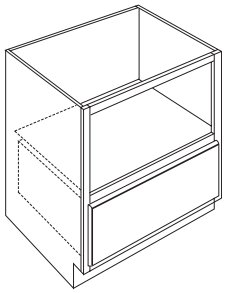

- Includes one bottom deep drawer.
- Designed for under counter installation of microwave.
- Includes matching interior.
- 18-21" altered depth modification available.
- Plywood bottom and cabinet front only modifications not available.
- For 32" high universal cabinet:
  - With 4½" high toe kick add UD to end of SKU. EXAMPLE: MWB24UD
  - With 9" high toe kick add UD9TK to end of SKU. EXAMPLE: MWB24UD9TK
  - NOTE: drawer height will be reduced when UD or UD9TK modification is applied.

- MWB24
- MWB27
- MWB30

Trash Can Pull-Out Base Cabinets, 24" Deep, 34½" High

- Pull-out is mounted to door.
- Altered depth, matching interior and full depth shelf modifications not available.
- Not available with 4½" high (UD) or 9" high toe kick (UD9TK).

One Drawer, Single Door with Wire Pullout

- TCPDMB15 1 Trash Can
- TCPDMB18 1 Trash Can
- 2TCPDMB18 2 Trash Cans
- 2TCPDMB21 2 Trash Cans

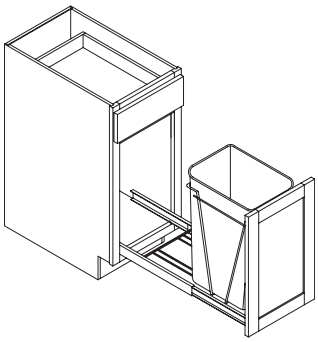

One Drawer, Single Door with Plywood Pullout

- TCPPB15 1 Trash Can
- TCPPB18 1 Trash Can
- 2TCPPB21 2 Trash Cans

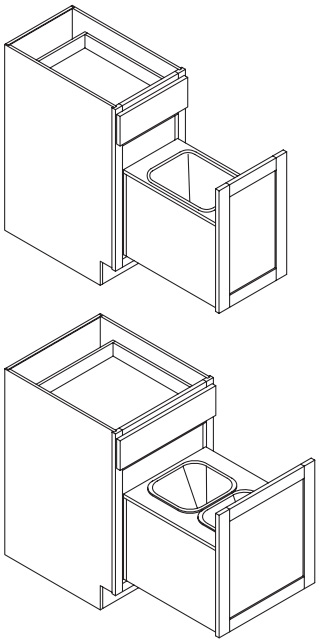

Base Wine Cube Cabinet, 24" Deep, 34½" High

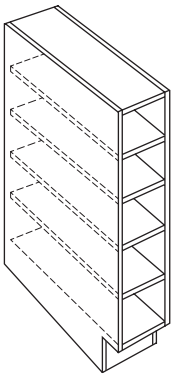

- BWC30

- Holds five wine bottles.
- Includes matching interior and four shelves.
- Altered depth and plywood bottom modifications not available.
- For 32" high universal cabinet:
  – With 4½" high toe kick add UD to end of SKU. EXAMPLE: BWC30UD
  – With 9" high toe kick add UD9TK to end of SKU. EXAMPLE: BWC30UD9TK
  NOTE: this reduces capacity to four wine bottles.

ARBOR | CREEK®

CABINETRY

500

TALL CABINETS

In This Section

500.3 12" and 24" Deep Utility Cabinets

500.4 Utility Fronts, Tall Microwave Cabinets

500.5 Tall Oven Cabinets

500.6 Tall Bookcase Cabinets

Utility Cabinets

- Adjustable shelf quantities listed in ( ) below.
- Doors up to 36" high receive two hinges per door; doors greater than 36" high receive three hinges.
- Top section height:
  – 84" high cabinet aligns with a 30" high wall cabinet
  – 90" high cabinet aligns with a 36" high wall cabinet
  – 96" high cabinet aligns with a 42" high wall cabinet

12" Deep

- Altered depth and matching interior modifications not available.
- Available with 9" high toe kick. Add 9TK to end of SKU.
  EXAMPLES: U1284129TKL* (single door), U248412D9TK (butt doors).

*Note exception for single door cabinets, hinge location is at end of SKU after 9TK.

Single Door

84" High (3)

- U128412 L or R
- U158412 L or R
- U188412 L or R
- U218412 L or R

90" High (3)

- U129012 L or R
- U159012 L or R
- U189012 L or R
- U219012 L or R

96" High (4)

- U129612 L or R
- U159612 L or R
- U189612 L or R
- U219612 L or R

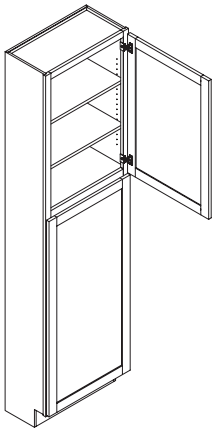

Butt Doors

84" High (3)

- U248412D
- U308412D

90" High (3)

- U249012D
- U309012D

96" High (4)

- U249612D
- U309612D

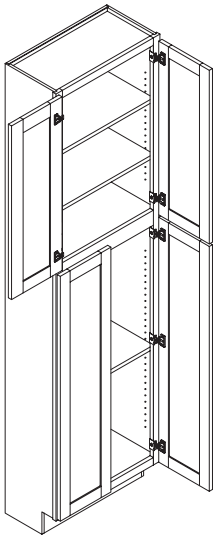

24" Deep

- 15-21" altered depth modification available.
- Matching interior modification not available.
- Available with 9" high toe kick. Add 9TK to end of SKU.
  EXAMPLES: U1284249TKL* (single door), U248424D9TK (butt doors).

*Note exception for single door cabinets, hinge location is at end of SKU after 9TK.

Single Door

84" High (3)

- U128424 L or R
- U158424 L or R
- U188424 L or R
- U218424 L or R

90" High (3)

- U129024 L or R
- U159024 L or R
- U189024 L or R
- U219024 L or R

96" High (4)

- U129624 L or R
- U159624 L or R
- U189624 L or R
- U219624 L or R

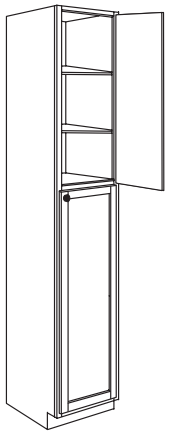

Butt Doors

84" High (3)

- U248424D
- U308424D

90" High (3)

- U249024D
- U309024D

96" High (4)

- U249624D
- U309624D

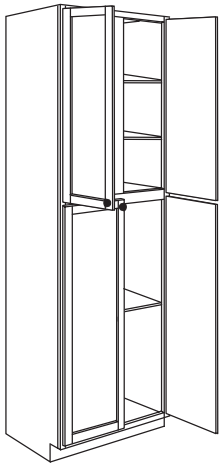

Utility Fronts

- Doors up to 36" high receive two hinges per door; doors greater than 36" high receive three hinges.
- Includes 6" high bottom rail.
- Top section height:
  – 84" high cabinet aligns with a 30" high wall cabinet
  – 90" high cabinet aligns with a 36" high wall cabinet
  – 96" high cabinet aligns with a 42" high wall cabinet
- Modifications not available.

Single Door

84" High
- UF1284 L or R

90" High
- UF1290 L or R

96" High
- UF1296 L or R

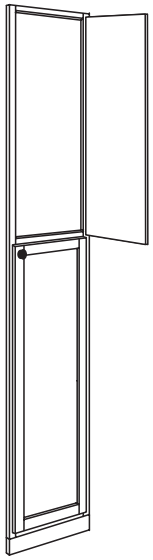

Butt Doors

84" High
- UF2484D

90" High
- UF2490D

96" High
- UF2496D

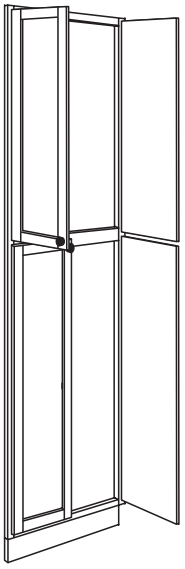

Tall Microwave Cabinets, 24" Deep

- Adjustable shelf quantities listed in ( ) below.
- Includes matching interior.
- Doors up to 36" high receive two hinges per door; doors greater than 36" high receive three hinges.
- Top section height:
  – 84" high cabinet aligns with a 30" high wall cabinet
  – 90" high cabinet aligns with a 36" high wall cabinet
  – 96" high cabinet aligns with a 42" high wall cabinet
- Available with 9" high toe kick; add 9TK to end of SKU.
  EXAMPLE: MWTC2784D9TK
- Altered depth and cabinet front only modifications not available.

Butt Doors Above and Below

84" High (2)
- MWTC2784D
- MWTC3084D
- MWTC3384D

90" High (2)
- MWTC2790D
- MWTC3090D
- MWTC3390D

96" High (3)
- MWTC2796D
- MWTC3096D
- MWTC3396D

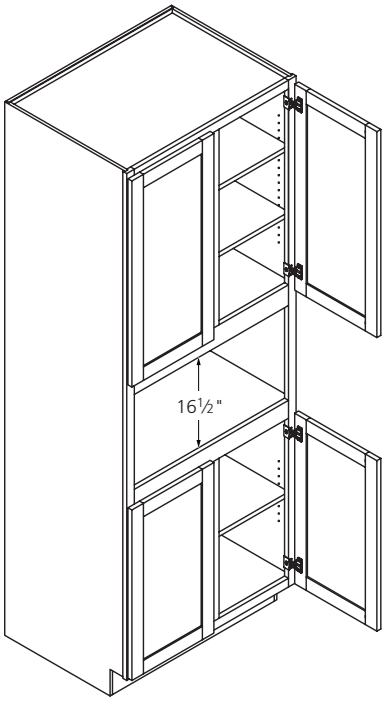

Tall Oven Cabinets, 24" Deep

- Adjustable shelf quantities listed in ( ) below.
- Doors up to 36" high receive two hinges per door; doors greater than 36" high receive three hinges.
- Altered depth, matching interior and cabinet front only modifications not available.

Single Drawer

Butt Doors Above, One Drawer Below

- Includes one standard drawer.
- Top section height:
  - 84" high cabinet aligns with a 18" high wall cabinet
  - 90" high cabinet aligns with a 24" high wall cabinet
  - 96" high cabinet aligns with a 30" high wall cabinet
- Not available with 9" high toe kick (9TK).

84" High (0)

- DOC2784D
- DOC3084D
- DOC3384D

90" High (1)

- DOC2790D
- DOC3090D
- DOC3390D

96" High (2)

- DOC2796D
- DOC3096D
- DOC3396D

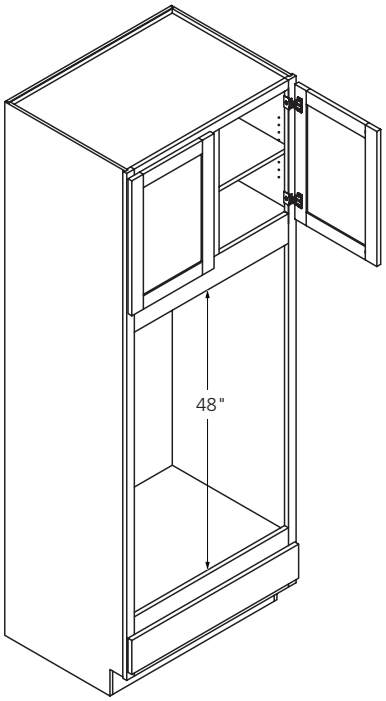

Double Drawer

Butt Doors Above, Two Drawers Below

- Includes two standard drawers.
- Top section height:
  - 84" high cabinet aligns with a 30" high wall cabinet
  - 90" high cabinet aligns with a 36" high wall cabinet
  - 96" high cabinet aligns with a 42" high wall cabinet
- Not available with 9" high toe kick (9TK).

84" High (2)

- OC2DB2784D
- OC2DB3084D
- OC2DB3384D

90" High (2)

- OC2DB2790D
- OC2DB3090D
- OC2DB3390D

96" High (3)

- OC2DB2796D
- OC2DB3096D
- OC2DB3396D

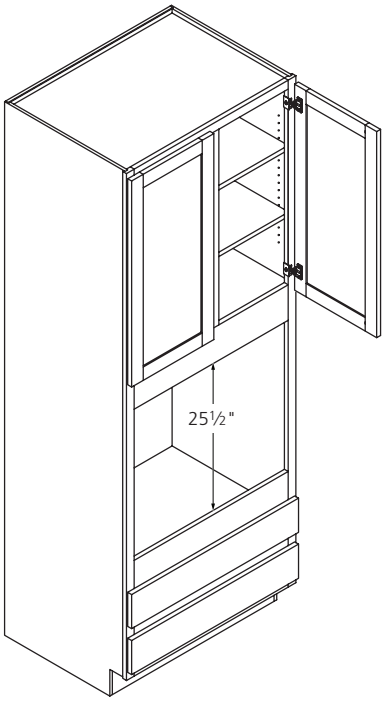

Triple Drawer

Butt Doors Above, Three Drawers Below

- Includes one standard top drawer and two deep bottom drawers.
- Top section height:
  - 84" high cabinet aligns with a 18" high wall cabinet
  - 90" high cabinet aligns with a 24" high wall cabinet
  - 96" high cabinet aligns with a 30" high wall cabinet
- Available with 9" high toe kick; add 9TK to end of SKU. EXAMPLE: OC3DB2784D9TK
  - NOTE: when 9TK modification is applied drawer height will be reduced equally on bottom two drawers; top drawer height remains the same.

84" High (0)

- OC3DB2784D
- OC3DB3084D
- OC3DB3384D

90" High (1)

- OC3DB2790D
- OC3DB3090D
- OC3DB3390D

96" High (2)

- OC3DB2796D
- OC3DB3096D
- OC3DB3396D

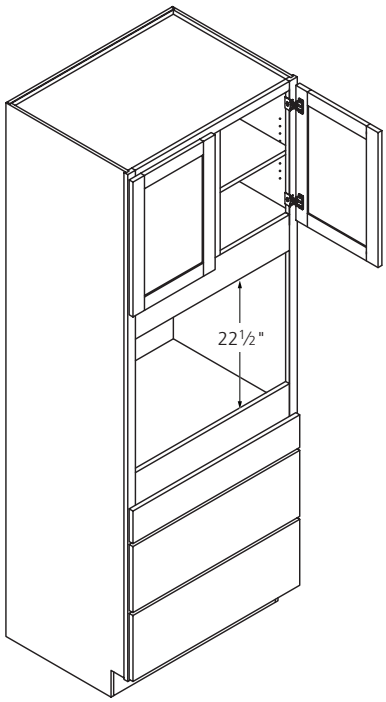

Tall Bookcase Cabinets, 12" Deep

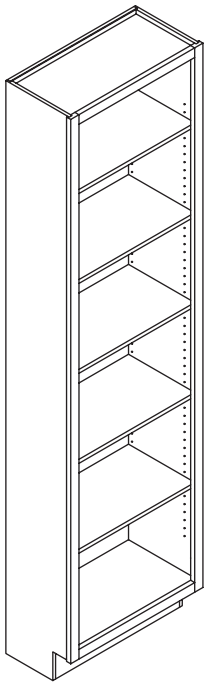

- Adjustable shelf quantities listed in ( ) below.
- Includes matching interior.
- Altered depth and cabinet front only modifications not available.
- Not available with 9" high toe kick (9TK).

84" High (5)

- TBC128412
- TBC158412
- TBC188412
- TBC218412
- TBC248412
- TBC308412

90" High (5)

- TBC129012
- TBC159012
- TBC189012
- TBC219012
- TBC249012
- TBC309012

96" High (6)

- TBC129612
- TBC159612
- TBC189612
- TBC219612
- TBC249612
- TBC309612

ARBOR | CREEK®

CABINETRY

600

VANITY CABINETS

In This Section

600.3 Vanity Base Cabinets, Vanity Sink Base Cabinets

600.4 Full Height Door Vanity Sink Base Cabinets, Vanity Sink Fronts, Triple Drawer Vanity Base Cabinets

600.5 Vanity Drawer Sink Base Cabinets, Vanity Sink Drawer Base Cabinets, Double Sink Vanity Base Cabinets

600.6 Single Sink Vanity Combination Cabinets, Vanity Knee Drawer, Vanity Wall Cabinets

Vanity Base Cabinets, 21" Deep, 32" High

- Includes two hinges per door.
- Includes one half-depth adjustable shelf.
- 18" altered depth modification available.
- Matching interior modification not available.
- To order 34½" high cabinet with 4½" high toe kick add KH to end of SKU. EXAMPLES: VB12KHL* (single door), VB24DKH (butt doors), VB39KH (double doors)
- To order 32" high cabinet with 9" high toe kick add 9TK to end of SKU. EXAMPLES: VB129TKL* (single door), VB24D9TK (butt doors), VB399TK (double doors)

*Note exception for single door cabinets, hinge location is at end of SKU after KH or 9TK.

Single Door, One Drawer

- VB09 L or R
- VB12 L or R
- VB15 L or R
- VB18 L or R
- VB21 L or R

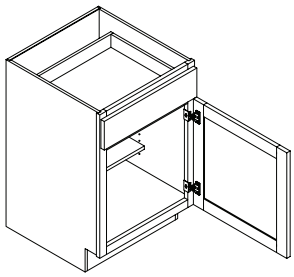

Butt Doors, One Drawer

- VB24D
- VB27D
- VB30D
- VB33D
- VB36D

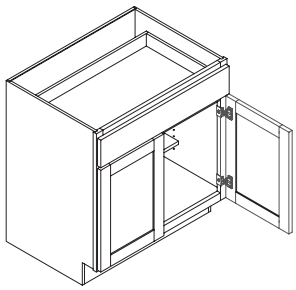

Double Doors, Two Drawers

- VB39
- VB42
- VB45
- VB48

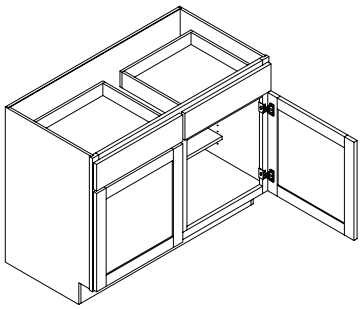

Vanity Sink Base Cabinets, 32" High

- Includes two hinges per door.
- Shelving is not included.
- Includes full back in cabinet. Plumbing accommodations must be made at time of installation.
- 12-18" altered depth modification available.
- Matching interior modification not available.
- To order 34½" high cabinet with 4½" high toe kick add KH to end of SKU. EXAMPLES: VSB1816KHL* (single door), VSB24DKH (butt doors), VSB39KH (double doors)
- To order 32" high cabinet with 9" high toe kick add 9TK to end of SKU. EXAMPLES: VSB18169TKL* (single door), VSB24D9TK (butt doors), VSB399TK (double doors)

*Note exception for single door cabinets, hinge location is at end of SKU after KH or 9TK.

16" Deep, Single Door, One False Drawer Front

- VSB1816 L or R

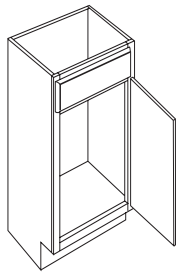

21" Deep, Single Door, One False Drawer Front

- VSB18 L or R
- VSB21 L or R

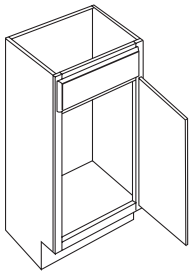

21" Deep, Butt Doors, One False Drawer Front

- VSB24D
- VSB27D
- VSB30D
- VSB33D
- VSB36D

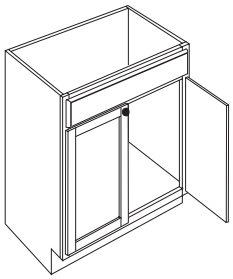

21" Deep, Double Doors, Two False Drawer Fronts

- VSB39
- VSB42
- VSB45
- VSB48

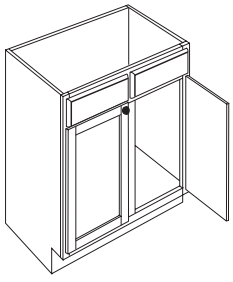

Full Height Door(s) Vanity Sink Base Cabinets, 21" Deep, 32" High

- Includes two hinges per door.
- Shelving is not included.
- 12-18" altered depth modification available.
- Matching interior modification not available.
- Includes full back in cabinet. Plumbing accommodations must be made at time of installation.
- To order 34½" high cabinet with 4½" high toe kick add KH to end of SKU. EXAMPLES: FHVSB18KHL* (single door), FHVSB24DKH (butt doors), FHVSB39KH (double doors)
- To order 32" high cabinet with 9" high toe kick add 9TK to end of SKU. EXAMPLES: FHVSB189TKL* (single door), FHVSB24D9TK (butt doors), FHVSB399TK (double doors)

*Note exception for single door cabinets, hinge location is at end of SKU after KH or 9TK.

Single Full Height Door

- FHVSB18 L or R
- FHVSB21 L or R

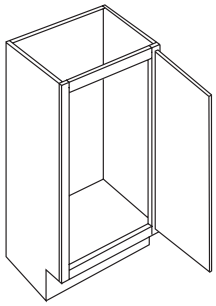

Full Height Butt Doors

- FHVSB24D
- FHVSB27D
- FHVSB30D
- FHVSB33D
- FHVSB36D

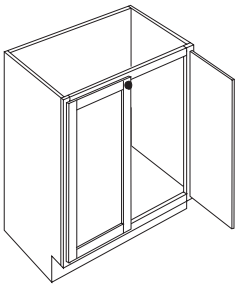

Full Height Double Doors

- FHVSB39
- FHVSB42
- FHVSB45
- FHVSB48

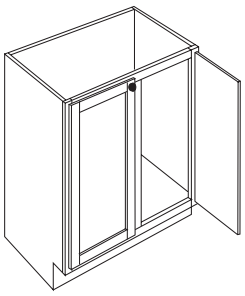

Vanity Sink Fronts, 32" High

- Includes two hinges per door.
- Does not include toe kick.
- Modifications not available.
- To order 34½" high cabinet front with 4½" high toe kick add KH to end of SKU. EXAMPLE: VSF30DKH.
  - NOTE: Front height will be adjusted to align with 34½" high KH cabinet; toe kick is excluded.
- To order 32" high cabinet front with 9" high toe kick add 9TK to end of SKU. EXAMPLE: VSF30D9TK.
  - NOTE: Front height will be adjusted to align with 32" high 9TK cabinet; toe kick is excluded.

Butt Doors, One False Drawer Front

- VSF30D
- VSF36D

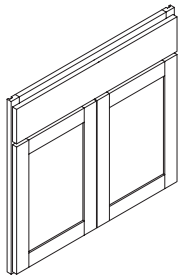

Full Height Butt Doors

- FHVSF30D
- FHVSF36D

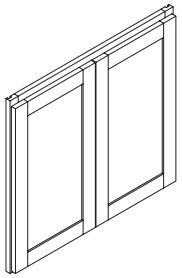

Triple Drawer Vanity Base Cabinets, 21" Deep, 32" High

- Includes standard top drawer and two deep bottom drawers.
- 18" altered depth modification available.
- Plywood bottom and matching interior modifications not available.
- To order 34½" high cabinet with 4½" high toe kick add KH to end of SKU. EXAMPLE: VDB309KH.
- To order 32" high cabinet with 9" high toe kick add 9TK to end of SKU. EXAMPLE: VDB3099TK.
- NOTE: when KH or 9TK modification is applied drawer height will be modified equally on bottom two drawers; top drawer height remains the same.

Three Drawers

- VDB309
- VDB312
- VDB315
- VDB318
- VDB321
- VDB324

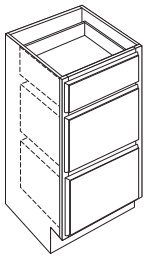

Vanity Drawer Sink Base Cabinets, 21" Deep, 32" High

- Includes two hinges per door.
- Includes false drawer front in top center position. Working drawers are on either side of sink.
- Shelving is not included.
- Includes full back in cabinet. Plumbing accommodations must be made at time of installation.
- 18" altered depth modification available.
- Matching interior modification not available.
- To order 34½" high cabinet with 4½" high toe kick add KH to end of SKU. EXAMPLE: VSDC36DKH.
- To order 32" high cabinet with 9" high toe kick add 9TK to end of SKU. EXAMPLE: VSDC36D9TK.

Drawer Width (Equivalent Cabinet Width)	
CABINET WIDTH	DRAWER WIDTH
36", 39"	9"
42", 45"	12"

Butt Doors, Two Drawers, One False Drawer Front

- VSDC36D

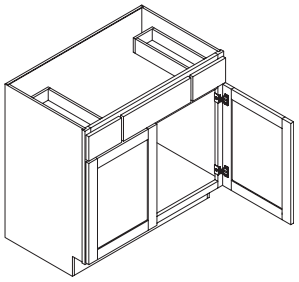

Double Doors, Two Drawers, One False Drawer Front

- VSDC39
- VSDC42
- VSDC45

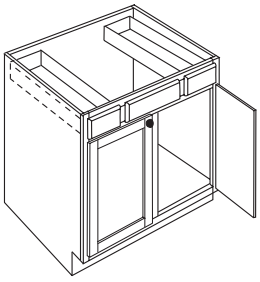

Vanity Sink Drawer Base Cabinets, 21" Deep, 32" High

- Available with left or right drawer stack. Choose appropriate code ending with **L** or **R**.
- Includes two hinges; door is hinged opposite of drawer stack.
- Includes false drawer front in top position and two functional drawers.
- Shelving is not included.
- Includes full back in cabinet. Plumbing accommodations must be made at time of installation.
- 18" altered depth modification available.
- Matching interior modification not available.
- To order 34½" high cabinet with 4½" high toe kick add KH to end of SKU. EXAMPLE: VSDB30KHL*
- To order 32" high cabinet with 9" high toe kick add 9TK to end of SKU. EXAMPLE: VSDB309TKL*

*Note for single door cabinets, hinge location is at end of SKU after KH or 9TK.

Single Door, One False Drawer Front, Two Drawers

	Functional Drawer Width
VSDB30 L or R	15"
VSDB36 L or R	18"
VSDB42 L or R	21"

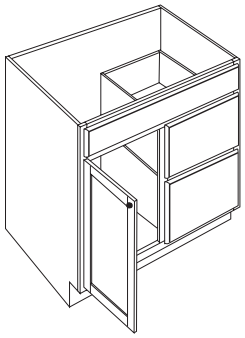

Double Sink Vanity Combination Cabinets, 21" Deep, 32" High

- Includes two hinges per door.
- Single door with false drawer front, left and right; one stack of three drawers, centered.
- Shelving is not included.
- Includes full back in cabinet. Plumbing accommodations must be made at time of installation.
- 18" altered depth modification available.
- Matching interior modification not available.
- To order 34½" high cabinet with 4½" high toe kick add KH to end of SKU. EXAMPLE: VSDB60SDSKH.
- To order 32" high cabinet with 9" high toe kick add 9TK to end of SKU. EXAMPLE: VSDB60SDS9TK.

Single Door Left and Right, Center Drawer Stack with Three Drawers, Two False Drawer Fronts

- VSDB54SDS
- VSDB60SDS

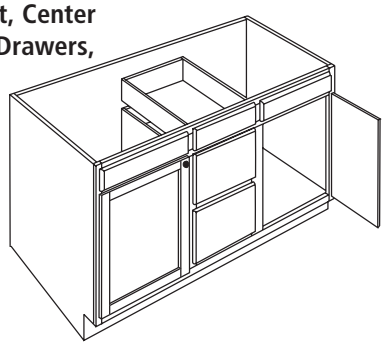

Single Sink Vanity Combination Cabinets, 21" Deep, 32" High

- Includes two hinges per door.
- Includes false drawer front in center position.
- Shelving is not included.
- Includes full back in cabinet. Plumbing accommodations must be made at time of installation.
- 18" altered depth modification available.
- Matching interior modification not available.
- To order 34½" high cabinet with 4½" high toe kick add KH to end of SKU. EXAMPLE: VSDB60DDSDKH.
- To order 32" high cabinet with 9" high toe kick add 9TK to end of SKU. EXAMPLE: VSDB60DDSD9TK.

Butt Doors, One False Drawer Front, Two Drawer Stacks with Three Drawers Each

■ VSDB60DDSD

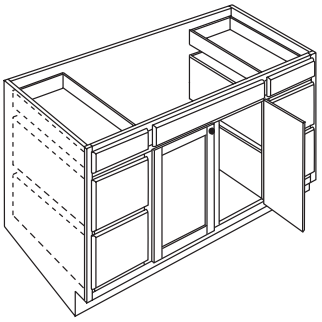

Vanity Knee Drawer, 21" Deep

- Standard shallow drawer.
- Includes 6" wide stiles on each side for field trimming.
- 18" altered depth modification available.
- Plywood bottom, matching interior and cabinet front only modifications not available.

■ VDU3624

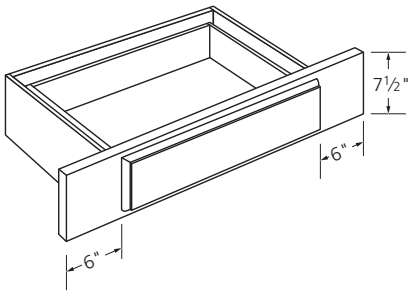

Vanity Topper Wall Cabinets, 12" Deep

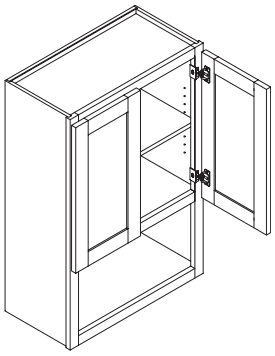

- Includes two hinges per door.
- VT2436D includes one adjustable shelf; VT2430D does not include shelving.
- Open area is 10½" high.
- Includes matching interior.
- 9" altered depth modification available.
- Cabinet front only modification not available.

Butt Doors

■ VT2430D
■ VT2436D

Vanity Medicine Wall Cabinets, 4⅜" Deep

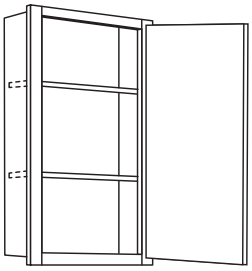

- Includes two hinges.
- Includes two fixed shelves.
- Cabinet is designed to be recessed in wall.
- Altered depth modification not available.

Single Door

■ MC24 L or R

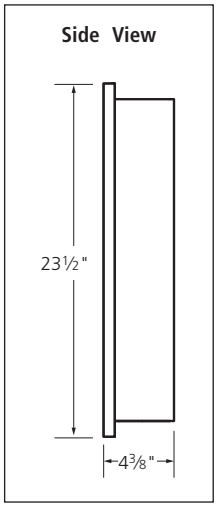

ARBOR | CREEK®

CABINETRY

700

ACCESSORIES & PARTS

In This Section

FILLERS, PANELS AND SKINS

700.3 Fillers, End Panels

700.4 Skins, Paneling, Sink Floors, Toe Kick Skins

MOLDINGS & VALANCES

700.5 Trim Molding, Crown Molding

700.6 Light Rail, Undermount and Base Moldings

DECORATIVE ACCESSORIES & KITS

700.6 Floating Shelves, Stem Glass Holder, Bar Bracket, Straight Post Leg

700.7 Shelving Kits, Roll-Out Tray Kits, Heat Shield

PARTS & TOUCH-UP ITEMS

700.8 Hinges, Guides, Shelf Clips, Bumper Pads, Miscellaneous Hardware, Touch-Up Items

Fillers, 3" and 6" Wide

- Finished on one side and all edges; backside is not finished.

  NOTE: edges of filler are not intended for exposed applications as they are finished but not sanded.
- Modifications not available.

3" Wide	6" Wide	Height
Wall		
■ AWF342	■ AWF642	42"
Base		
■ ABF3	■ ABF6	30"
Tall		
■ AWF396	■ AWF696	96"

Base Corner Filler, 3" x 3"

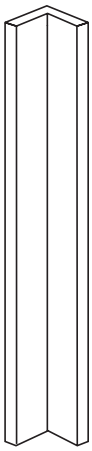

- Finished on one side; edges and backside are unfinished.

■ ABCF3X3 30" High

End Panels

- Both sides and front filler are finished.

Refrigerator

- 15-21" altered depth modification available on 24" deep end panels; modifications not available on 12" deep and 30" deep end panels.

12" Deep	24" Deep	30" Deep	Width	Height
■ AREP1.58412	■ AREP1.58424	■ AREP1.58430	1½"	84"
■ AREP1.59612	■ AREP1.59624	■ AREP1.59630	1½"	96"
■ AREP38412	■ AREP38424	■ AREP38430	3"	84"
■ AREP39612	■ AREP39624	■ AREP39630	3"	96"

Wall

- 6-24" altered depth modification available.

12" Deep	Width	Height
■ AWEP1.530	1½"	30"
■ AWEP1.536	1½"	36"
■ AWEP1.542	1½"	42"
■ AWEP330	3"	30"
■ AWEP336	3"	36"
■ AWEP342	3"	42"

Base

- 12-21" altered depth modification available.

24" Deep	Width	Height
■ ABEP1.5	1½"	34½"
■ ABEP3	3"	34½"
■ ABEP6	6"	34½"

Vanity Base

- 12-18" altered depth modification available.

21" Deep	Width	Height
■ AVEP1.5	1½"	32"
■ AVEP3	3"	32"
■ AVEP6	6"	32"

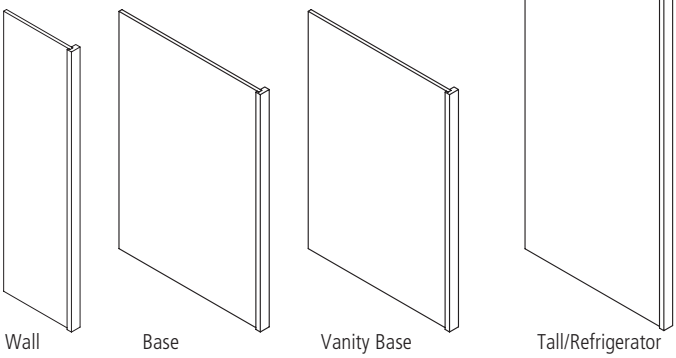

Wall Base Vanity Base Tall/Refrigerator

End Skins

- Finished on one side.
- Modifications not available.

1/8" Thick Laminated MDF	1/4" Thick Finished Plywood	Width	Height
Wall			
■ AWSL30	■ AWSP30	12"	30"
■ AWSL42	■ AWSP42	12"	42"
Base			
■ ABSL	■ ABSP	24"	34½"
Vanity			
■ AVSL	■ AVSP	21"	32"
Tall			
■ AUSL84	■ AUSP84	24"	84"
■ AUSL96	■ AUSP96	24"	96"

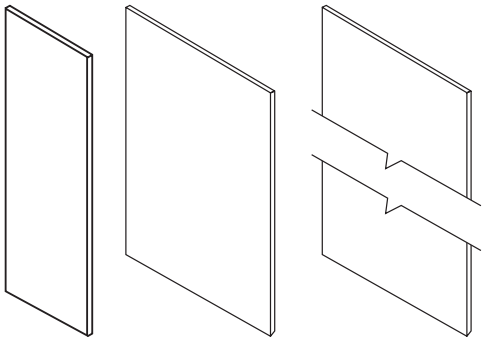

Finished Paneling

- Finished on one side.
- Modifications not available.

1/8" Thick Hardboard	1/4" Thick Plywood
■ AFBM4834	■ AFPP4834
■ AFBM4896	■ AFPP4896

1/2" Thick Particle Board	5/8" Thick Particle Board
■ APPB4834	■ APPB5/84834
■ APPB4896	■ APPB5/84896

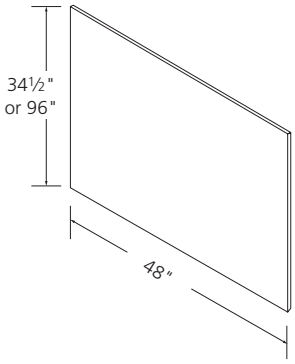

Interior Paneling

- Finished on one side.
- Hardboard paneling features maple grained laminate (ASPL); plywood paneling features crystal veneer (ASPP).
- Modifications not available.

1/8" Thick Hardboard	1/4" Thick Plywood
■ ASPL4834	■ ASPP4834
■ ASPL4896	■ ASPP4896

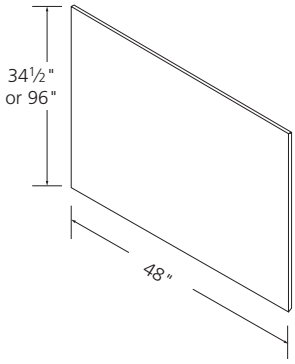

Sink Front Floors, 24" Deep

- Finished on top side; backside and edges not finished.
- Modifications not available.

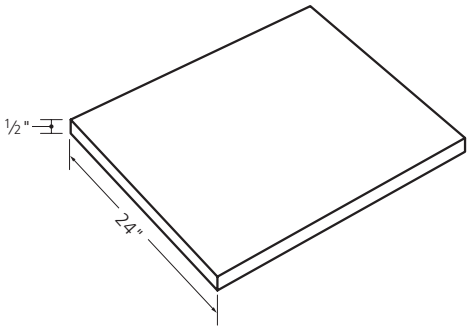

- ■ ASFF24
- ■ ASFF30
- ■ ASFF48
- ■ ASFF66

Toe Kick Skins

- Install over unfinished toe space assembly on base, vanity base and tall cabinets.
- 8′ lengths.
- Finished on one side; edges and backside not finished.
- Modifications not available.

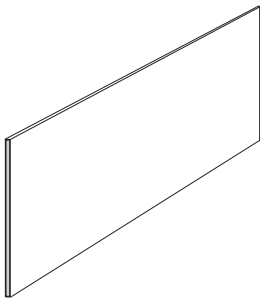

1/8" Thick Laminated MDF	Height
■ ATK0	4¼"
■ ATK09	8¾"

1/4" Thick Finished Plywood	Height
■ ATKP	4¼"
■ ATKP9	8¾"

Inside Corner Molding

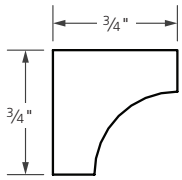

- 8' lengths.
- Molding will be paper wrapped to match end panels.
- Modifications not available.

■ AICM8

Outside Corner Molding

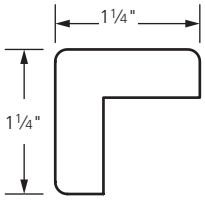

- 8' lengths.
- Molding will be paper wrapped to match end panels.
- Modifications not available.

■ AOCM8

Scribe Molding

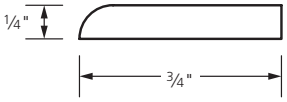

- 8' lengths.
- Molding will be paper wrapped to match end panels.
- Modifications not available.

■ ASM8

Batten Molding

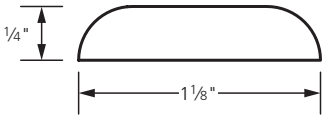

- 8' lengths.
- Finished wood or paint grade molding.
- Modifications not available.

■ ABM8

Quarter Round Molding

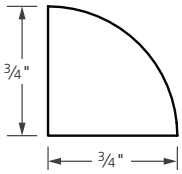

- 8' lengths.
- Finished wood or paint grade molding.
- Modifications not available.

■ ASHM8

Crown Molding

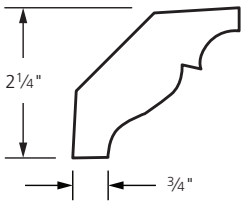

- 8' lengths.
- Molding will be paper wrapped to match end panels.
- Modifications not available.

■ ACM8

Large Crown Molding

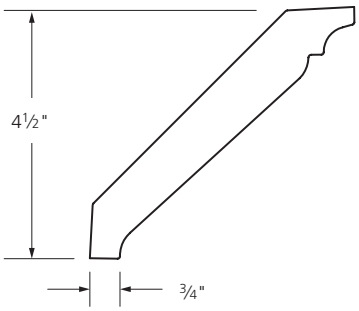

- 8' lengths.
- Molding will be paper wrapped to match end panels.
- Modifications not available.

■ ACML8

Large Cove Crown Molding

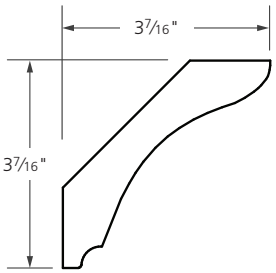

- 8' lengths.
- Finished wood or paint grade molding.
- Modifications not available.

■ ALCOVEM8

Shaker Crown Molding

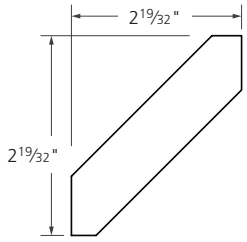

- 8' lengths.
- Finished wood or paint grade molding.
- Modifications not available.

■ ASHCM8

Light Rail Molding

- 8′ lengths.
- ⅝" thick.
- Modifications not available.

- ALRM196 1" High
- ALRM1.596 1½" High

Undermount Accent Molding

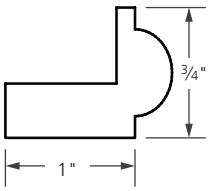

- 8′ lengths.
- Modifications not available.

- AUM8

Base Molding

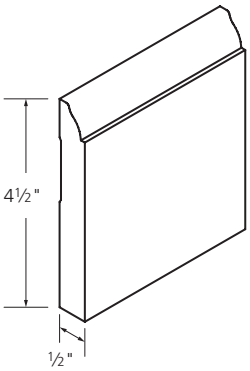

- 8′ lengths.
- Modifications not available.

- ABBM8

Straight Valances, 5" High

- Modifications not available.

- ASTV36
- ASTV48
- ASTV72
- ASTV96

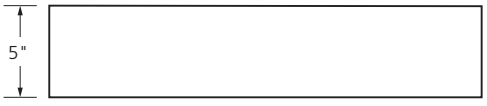

Floating Shelves, 10" Deep

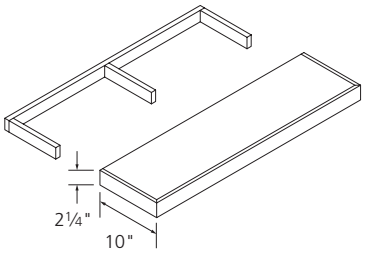

- Includes mounting bracket.
- Modifications not available.

- AFS24
- AFS30
- AFS36
- AFS42

Stem Glass Holder

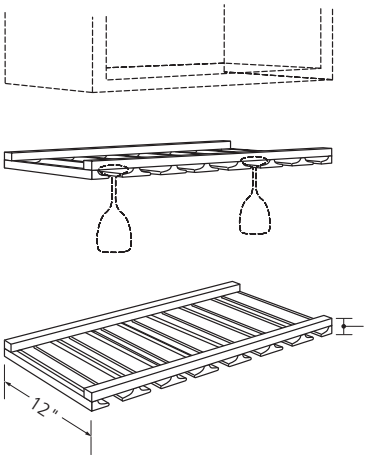

- Modifications not available.

- ASWR36

Bar Bracket

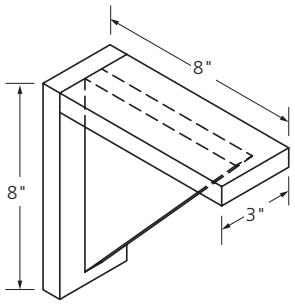

- Modifications not available.

- ABB8

Straight Post Leg

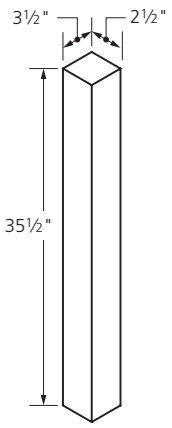

- Modifications not available.

- ABSTL35

Shelving Kits

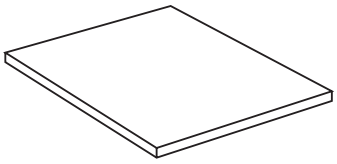

- Includes four shelves per kit.
- Last two digits in SKU indicate coordinating cabinet width.
- Shelving is natural maple laminate; matching interior modification available.
- 15"– 21" altered depth modification available on 24" deep shelf kits; 6" – 9" altered depth on 12" deep shelf kits.

24" Deep	12" Deep
■ ABSK18	■ AWSK18
■ ABSK21	■ AWSK24
■ ABSK24	■ AWSK48
■ ABSK30	
■ ABSK36	
■ ABSK42	

Roll-Out Tray Kits

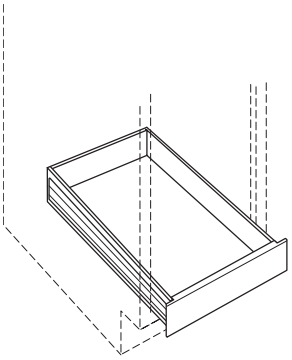

- Includes four 3⅜" high dovetail roll-out trays and side-mount guides per kit.
- 18"– 21" altered depth modification available.
- Soft-close drawer guide upgrade not available.

■ AROT12
■ AROT15
■ AROT18
■ AROT21
■ AROT24
■ AROT27
■ AROT30
■ AROT33
■ AROT36

Heat Shield

- For use with thermofoil laminate door styles.
- Protects cabinetry from adjacent heat source such as built in ovens, under cabinet ovens, drop-in or free-standing ranges, etc.
- Modifications not available.

■ AHSK

Parts

• All parts are quantity one unless otherwise noted.

SKU	DESCRIPTION
AFULLOLSTDHNG	Full Overlay Standard Hinge
AFULOLSFTCLSHNG	Full Overlay Soft-Close Hinge
A1/2OL6WYHNG	½ Overlay 6-Way Adjustable Hinge
A1/2OLSFTCLSHNG	½ Overlay Soft-Close Hinge
ABSTDGUIDE	24" Deep Base Cabinet Standard Guide Set
ABUDMNTSFTCLSGD	24" Deep Base Cabinet Undermount Soft-Close Guide Set
AVSTDGUIDE	21" Deep Vanity Cabinet Standard Guide Set
AVUDMNTSFTCLSGD	21" Deep Vanity Cabinet Undermount Soft-Close Guide Set
ASHFCLIP3/4	¾" Shelf Clip
ABUMPERPADS	Bumper Pads (strip of approximately 5,000)
2GROMMET	2" Grommet
ALSHW36	Lazy Susan Corner Base Cabinet Hardware (contains two shelves, one telescoping center pole and one pack of mounting hardware)

Touch-Up Items

• Filler putty (AFILLERPUTTY_) is quantity one.
• Spray can (ASPRAYCAN_) is quantity one.
• Touch-up kit (ATUKIT_) includes two pens, two wax sticks and one filler putty can.

STAIN	FILLER PUTTY	SPRAY CAN	TOUCH-UP KIT
Coffee	AFILLERPUTTYCE	ASPRAYCANCE	ATUKITCE
Espresso	AFILLERPUTTYEP	ASPRAYCANEP	ATUKITEP
Graphite	AFILLERPUTTYGP	ASPRAYCANGP	ATUKITGP
Nebbia	AFILLERPUTTYNB	ASPRAYCANNB	ATUKITNB
Nuvoloso	AFILLERPUTTYNU	ASPRAYCANNU	ATUKITNU
Pecan	AFILLERPUTTYPE	ASPRAYCANPE	ATUKITPE
Slate	AFILLERPUTTYSS	ASPRAYCANSS	ATUKITSS

PAINT	FILLER PUTTY	SPRAY CAN	TOUCH-UP KIT
Dove Grey	AFILLERPUTTYDG	ASPRAYCANDG	ATUKITDG
Dover White	AFILLERPUTTYDV	ASPRAYCANDV	ATUKITDV
Grigio Grey	AFILLERPUTTYGG	ASPRAYCANGG	ATUKITGG

THERMOFOIL LAMINATE	FILLER PUTTY	SPRAY CAN	TOUCH-UP KIT
Bianco White	AFILLERPUTTYBH	ASPRAYCANBH	ATUKITBH
Fog Grey	AFILLERPUTTYFE	ASPRAYCANFE	ATUKITFE

ARBOR | CREEK®

CABINETRY

800

MODIFICATIONS

In This Section

800.2 Hinge Upgrade, Drawer Guide Upgrade, Cabinet Front Only, Door Only

800.3 Altered Depth, Matching Interior, Matching Plywood End Panels, Plywood Bottom, Full-Depth Shelf Modification

800.4 Universal Access Options, Kitchen Height Vanity Base Options

Gentle-Touch (Soft-Close) Hinge Upgrade

- Heavy-duty, high-quality steel, concealed 6-way hinge.

■ G

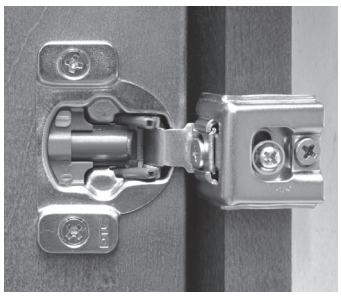

Soft-Close Drawer Guide Upgrade

- Full-extension undermount guide constructed of high quality steel opens drawer to provide easy access and reach all contents.
- Full access undermount drawer guide features:
  – Self-adjust in rear mounting brackets
  – Built-in stop, self-closing and stay-closed feature
  – 75 lb rated load capacity
- Soft-close helps reduce drawer slamming and bounce back.
- Available in 24", 21" and 18" deep cabinets.
- Vertical drawer adjustment on drawer guide bottom behind drawer front.

■ SC

Cabinet Front Only

- Front frame, doors, and drawer fronts only.
- We recommend using this option on cabinetry without installed accessories since all interior components would be eliminated except for face frame, doors and drawer fronts.
- For base cabinets, the toe space area is excluded and the height of face frame is 4½" less than original cabinet height.

■ WALLFRONT.ONLY
■ BASEFRONT.ONLY

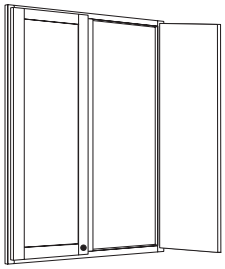

WALLFRONT.ONLY

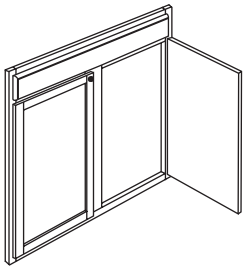

BASEFRONT.ONLY

Doors as Panels / Door Only

- May be used to order doors for use as decorative panels on cabinet end panels or loose doors for other purposes.
- For decorative panel, field install door onto sides of exposed cabinet end panels.
- Specify DOOR.ONLY on cabinet desired, location of door on cabinet with multiple doors (example: upper or lower door of a tall utility cabinet) and hinge location if hinging is required.
- All doors can be ordered with no hinge bore.

■ DOOR.ONLY

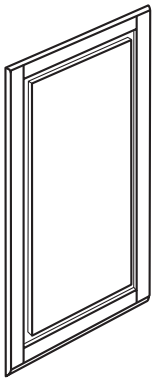

Altered Depth

- Altered depth available in 3" increments.
- Specify overall finished depth.
- See following for general altered depth specifications; see individual cabinet specifications for depth availability by SKU.

General Altered Depth Specifications:

- Wall Cabinets: 6", 9", 15", 18", 21" or 24"
- Base Cabinets with drawers: 18" or 21"
- Base Cabinets without drawers: 12", 15", 18" or 21"
- 24" Deep Tall Utility Cabinets: 15", 18" or 21"
- Vanity Cabinets with drawers: 18"
- Vanity Cabinets without drawers: 12", 15" or 18"
- Accessories: see Section 700 for details.

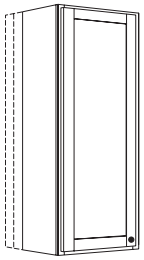

Wall Cabinets

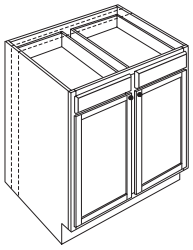

Base Cabinets

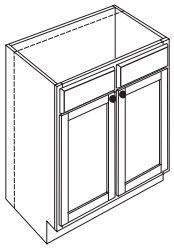

Vanity Cabinets

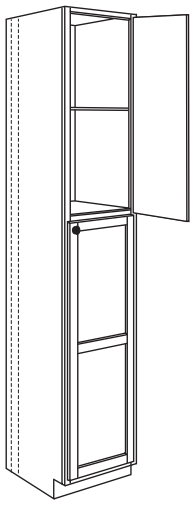

Tall Cabinets

Matching Interior

- Individual cabinets only.
- Finished interior option is available in standard and Allwood construction.
- Finished interior option comes standard on all open cabinets; finished interior option does not come standard on "box.only" orders.
- Backside of face frame is unfinished.
- End panel exterior will match standard end panel material and finish offering for construction series selected, see Section 100 for details.

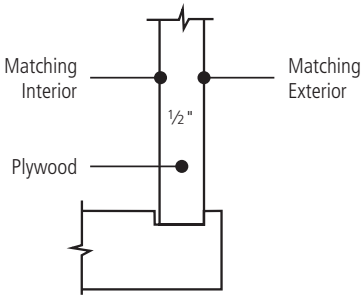

2020 ORDER EXAMPLE

W3030 choose "attributes" and then select "add-ons" then "matching interior" (MI) option.

Matching Plywood End Panels

- This construction option affects cabinet end panels only.
- Available for full or partial kitchen orders.
- ½" plywood end panels are available for most cabinets.
- End panel exteriors will be finished veneer for stain finishes and complementary matching laminate for paint and thermofoil finishes.
- Shelves, ceilings, and floors remain as composite wood with maple grained laminate on exposed faces when ordered in standard framed construction.

2020 ORDER EXAMPLE

W3030 choose "attributes" and then select "add-ons" then "matching veneer plywood end panel upgrade."

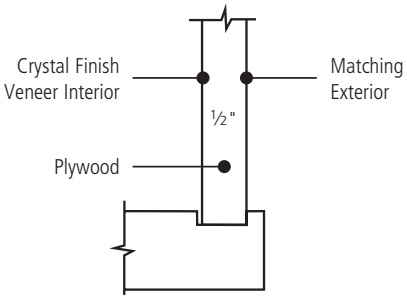

Plywood Bottom

- This construction option affects cabinet bottoms only.
- Available on most base and vanity cabinets.
- Shelves and end panels remain as composite wood with natural laminate on exposed faces when ordered in standard particleboard construction.

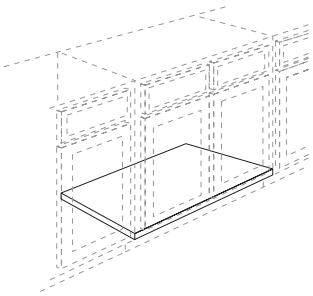

Full-Depth Shelf Modification

- This modification is applicable to base cabinets which contain a half-depth shelf as a standard inclusion.
- One full-depth shelf is included and end panels are drilled to accept deeper shelf.

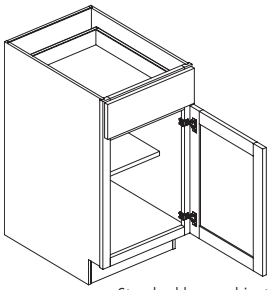

Standard base cabinet with half depth shelf

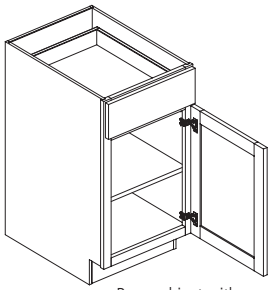

Base cabinet with full depth shelf

Universal Access Options

- Applicable to select base, vanity base and tall cabinets, see Sections 400-600 for availability.
- Base cabinet is modified to 32" high; available with a 4½" or 9" high toe kick.
- Vanity base cabinet remains 32" high; toe kick is modified to 9" high.
- Tall cabinet remains the same height; toe kick is modified to 9" high.

Base Cabinet Options

- For 32" high universal cabinet:
  - With 4½" high toe kick add UD to end of SKU. EXAMPLES: FHB12UDL* (single door), FHB24DUD (butt doors), FHB39UD (double doors).
  - With 9" high toe kick add UD9TK to end of SKU. EXAMPLES: FHB12UD9TKL* (single door), FHB24DUD9TK (butt doors), FHB39UD9TK (double doors).

*Note exception for single door cabinets, hinge location is at end of SKU after UD or UD9TK.

■ UD
■ UD9TK

Vanity Base Cabinet Options

- To order 32" high cabinet with 9" high toe kick add 9TK to end of SKU. EXAMPLES: FHVSB189TKL* (single door), FHVSB24D9TK (butt doors), FHVSB399TK (double doors).

*Note exception for single door cabinets, hinge location is at end of SKU after 9TK.

■ 9TK

Tall Cabinet Options

- To order a tall cabinet with 9" high toe kick add 9TK to end of SKU. EXAMPLES: U1284249TKL* (single door), U2484249TK (butt doors).
- Cabinet height remains 84", 90" or 96".

*Note exception for single door cabinets, hinge location is at end of SKU after 9TK.

■ 9TK

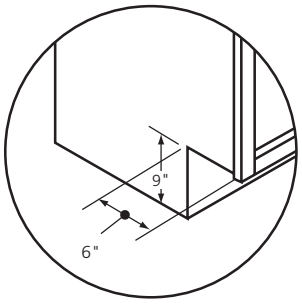

9" High Toe Kick Options

Kitchen Height Vanity Base Options

- Applicable to select vanity base cabinets, see Section 600 for availability.
- Vanity base cabinet modified to 34½" high.
- To order 34½" high cabinet with 4½" high toe kick add KH to end of SKU. EXAMPLES: FHVSB18KHL* (single door), FHVSB24DKH (butt doors), FHVSB39KH (double doors).

*Note exception for single door cabinets, hinge location is at end of SKU after KH.

- Not available in conjunction with 9TK modifications.

■ KH

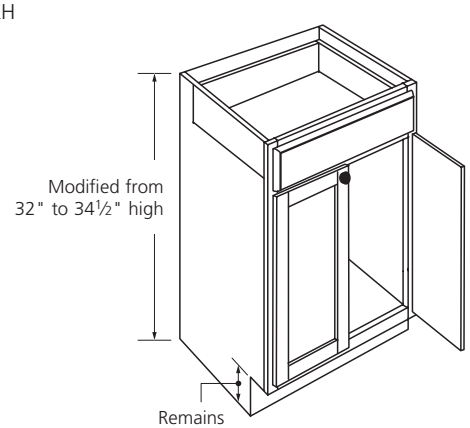

Vanity base shown with KH modification

ARBOR | CREEK®

CABINETRY

ARBORCREEKCABINETS.COM

BUILT IN USA
OF GLOBAL & DOMESTIC PARTS

A Cabinetworks Group brand

©2022 Arbor Creek Cabinetry